ESTIMATION OF THE BROOK AND SEA LAMPREY AMMOCETE POPULATIONS OF THREE STREAMS

by

BERNARD R. SMITH AND ALBERTON L. McLAIN

Bureau of Commercial Fisheries
U.S. Fish and Wildlife Service
Marquette, Michigan

A PHOTOELECTRIC AMPLIFIER AS A DYE DETECTOR

by

WESLEY J. EBEL

Bureau of Commercial Fisheries
U.S. Fish and Wildlife Service
Marquette, Michigan

GREAT LAKES FISHERY COMMISSION
NATURAL RESOURCES BUILDING
UNIVERSITY OF MICHIGAN
ANN ARBOR, MICHIGAN

1962

A PHOTOELECTRIC AMPLIFIER AS A DYE DETECTOR

Wesley J. Ebel

ABSTRACT

A dye detector, based on a modified photoelectric amplifier, has been planned, built, and tested. It was designed to record automatically the time of arrival of fluorescein dye at predetermined points in a stream system. Laboratory tests and stream trials proved the instrument to be efficient. Small changes in color can be detected in turbid or clear water. The unit has been used successfully for timing intervals of more than 17 hours; significant savings of time and manpower have resulted.

Replacement of the clock, included in the original device, with a recording milliammeter increases the efficiency of the unit by continuously recording changes in turbidity. The addition of this component would increase the cost from $75 to approximately $105.

Introduction

Development of new equipment and techniques has contributed greatly to the progress of the sea lamprey *(Petromyzon marinus)* control program of the Great Lakes Laboratory, Bureau of Commercial Fisheries.[1] An important problem in the use of chemicals in lamprey control has been the development of an efficient method of timing water movement. The start of chemical metering must be on a time schedule that allows treated water masses to reach the confluence of tributaries simultaneously. The most effective means of determining the correct time is to introduce fluorescein dye at the application points and record time of arrival at predetermined locations (Applegate, Howell, Moffett, Johnson, and Smith, 1961). This process usually required a large amount of staff time and the extensive use of vehicles. A photoelectric amplifier, modified for use as a dye detector, has been developed to increase the efficiency of this operation.

An instrument for timing water movement had to fulfill the following requirements: simple and durable design to limit mechanical failure; portability, for movement to difficult access

1 This study is part of a program conducted by the Bureau of Commercial Fisheries under contract with the Great Lakes Fishery Commission.

locations; automatic recording of the arrival time of dyes; sensitivity to small amounts of dye in streams of various colors (turbidities); and, low cost.

Chemical and electrical methods of detection were considered. No suitable chemical system of detection was found since fluorescein is a relatively inert compound that does not enter into chemical reactions easily (Gould, 1955). On the other hand, electrical circuits that can be used to detect variations in water color are readily available. Several of these circuits were investigated and their adaptability studied. All of this equipment contained various light-sensitive elements and had varying degrees of sensitivity to different portions of the light spectrum.

Requirements were best met by modifying a circuit containing a 1P39 phototube (Whitmer, 1960). This phototube has a maximum response between 3,000 and 7,000 angstroms (Bukstein, 1961). Since plate current is linearly related to illumination, it allows the tube to have adequate sensitivity to varying degrees of light intensity and hence to light altered by water color.

Description and Circuitry

The dye detector designed for the sea lamprey program consists of three basic components--a photoelectric amplifier, a waterproof sensing unit, and a power supply (Fig. 1). The power supply is a 12-volt, 72-ampere-hour battery equipped with a 265-volt converter. A 12-volt D.C. electric clock is included in the circuit to permit the recording of time. The complete unit weighs about 20 pounds and can be carried by one man. Cost of all parts and materials is approximately $ 75.

The amplifier, converter, and clock are all contained in a case constructed of marine plywood. The sensing unit, including a light source to minimize the effects of sunlight and darkness, is contained in a galvanized sheet-metal housing (Fig. 2). This housing is painted black to minimize light reflections. The light in the sensing unit is directed at the phototube at a distance (6 inches) which allows water to circulate freely. The openings to the water space are screened with hardware cloth to prevent activation of the mechanism by floating or suspended objects. One-pint, wide-mouth jars, neoprene tubing and tubing fittings provide waterproof containers for the phototubes, light source and wires. The fragile components are padded with sponge rubber.

The description of the circuit can be followed most easily through reference to the schematic diagram of the detector in Figure 3. The 265-volt A.C. source is coupled to the amplifier

Figure 1.--Dye detector showing sensing unit, photoelectric amplifier, and power supply.

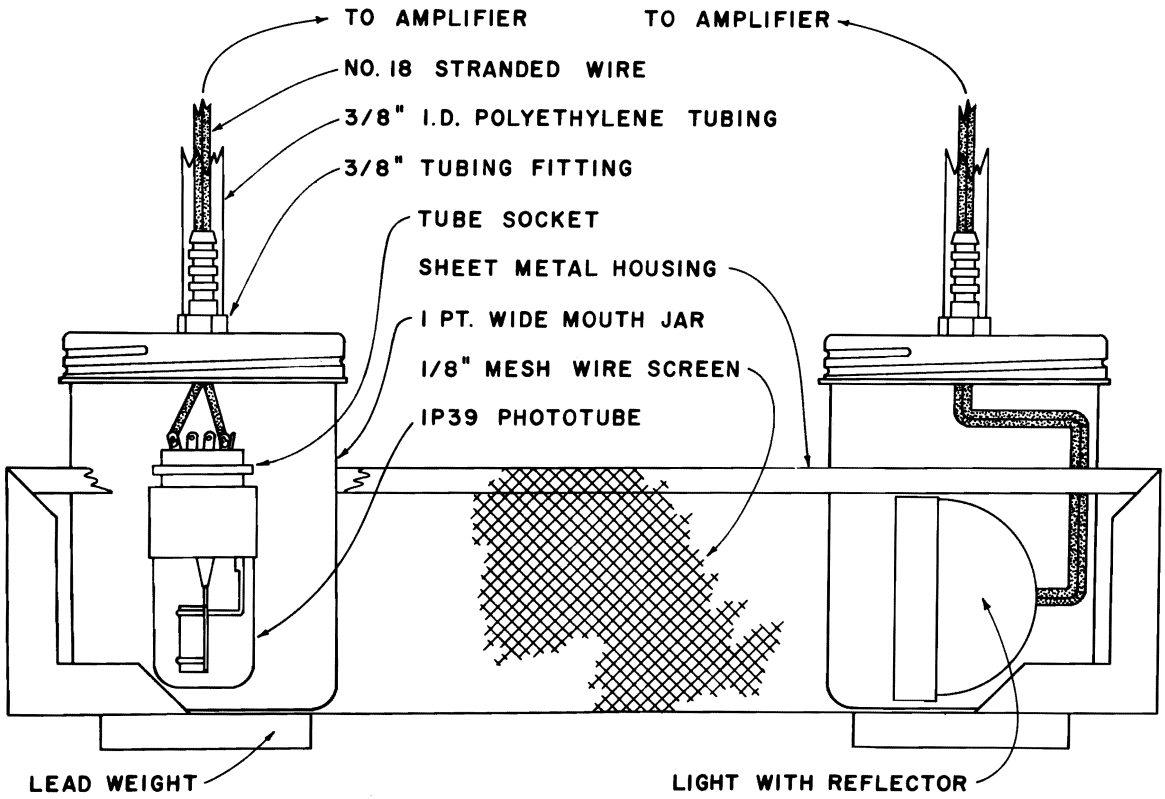

Figure 2.--Diagram showing sensing unit with light source and phototube.

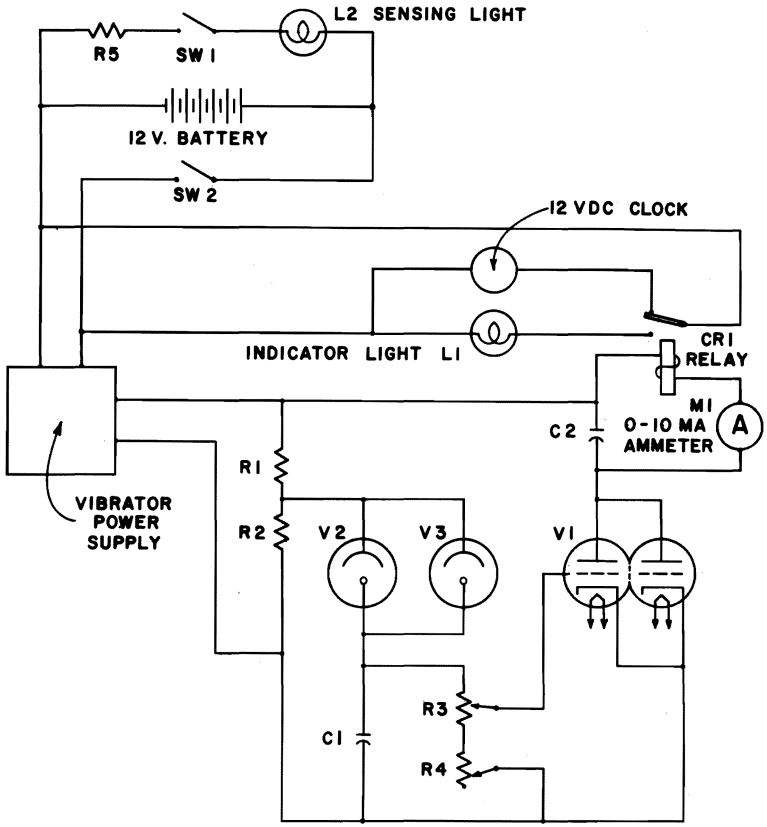

CAPACITORS:
C1 - .025 MFD, 450 V
C2 - 10 MFD, 250 V

LIGHTS:
L1 - 12 V
L2 - 6 V, (G.E. NO 502)

RESISTORS:
R1 - 10 K, 1 W
R2 - 47 K, 1 W
R3 - 10 MEG
R4 - 750 K
R5 - 50 Ω

VACUUM TUBES:
V1 - 12AT7, TWIN TRIODE
V2 - 1P39, PHOTOTUBE
V3 - 1P39, PHOTOTUBE

Figure 3.--Schematic diagram of dye detector.

circuit from the vibrator power supply. Cathode voltage at pin 8 of V2 and V3 is obtained from a voltage divider consisting of R1 and R2. When A. C. power is applied, the photoelectric tubes conduct during the half cycle when pin 5 is positive with respect to pin 8--provided the light source is energizing the photocathode. Capacitor C1 and resistor R3 and R4 provide both coupling and time delay. Conduction of V2 and V3 causes C1 to charge. On the

next half cycle, C1 attempts to discharge through R3 and R4. Because the slider arm of R3 is connected to the grid of V1, this tube is biased in accordance with the charge on C1 and the setting of R3 and R4. The polarity of supply voltage applied between plate and cathode of V1 is 180° out of phase with the voltage across V2 and V3, so their conduction periods will occur during opposite half cycles. As long as light energizes the photocathode, the discharge current of C1 through R3 and R4 will be sufficient to keep V1 cut off. When light does not fall on the photocathode, C1 will complete its discharge cycle to the point where V1 can conduct. At this time, current through V1 energizes relay CR1, opening the normally closed contacts and closing the normally open contacts (relay de-energized is considered normal). The current through V1 also charges C2 during this half-cycle conduction period. During the next half cycle when the supply voltage across V1 is such that the tube cannot conduct, C2 discharges through contact relay CR and keeps it energized. The contacts of relay CR1 form a single-pole, double-throw switch. When relay CR1 is closed or activated, indicator light L1 operates and the clock stops, thereby recording the arrival time of the dye.

The sensing light L2 is connected through switch SW1 and resistor R5. R5 reduces current and voltage to the desired level for maximum life of the sensing light. R3, R4, and meter M1 are used to adjust to water color and to control sensitivity. Meter M1 measures current through CR1. Since CR1 activates at 4.6 milliamps and de-energizes at approximately 3.0 milliamps, R3 and R4 can be used to keep amplifier tube V1 operating between 3.0 and 4.6 milliamps output regardless of water turbidity. R3, 10 megohms, provides coarse adjustment and R4, 750K, may be used as fine adjustment. Two phototubes in parallel are used to increase reliability and the 12AT7 is wired in parallel to increase current output.

Because the value selected for C1 is greater than is needed for half-cycle coupling, the time delay will be such that the light to the photocathode must be interrupted for more than one-half cycle before V1 can conduct. This arrangement prevents a momentary cloud of silt from activating the relay. The value which gave satisfactory time delay was 0.025 MFD. A larger value for C1 may be used if more time delay is desired. The closer V1 is adjusted to 4.6 milliamps, the greater the sensitivity of the unit. The greater the sensitivity, the shorter the time delay.

The efficiency and value of the detector can be increased by installing a recording milliammeter to measure continually the flow of current through V1. This record has the advantage of

providing a means of detecting any natural change in water turbidity and provides, not only the arrival time of the dye, but a measure of its duration. It also eliminates the possibility of error from a silt cloud which may last long enough to cause relay CR1 to operate and stop the clock.

Testing and Operation

The detector was tested in the laboratory to determine: correct spacing between light sources and phototubes; optimum milliamp setting; and relative efficiency of one or two phototubes. These points were tested at various turbidity readings from 0 to 400 on a Klett Summerson colorimeter scale and with fluorescein dye concentrations from 0.1 to 3.5 p.p.m. The range of turbidity corresponded with the minimum and maximum values encountered in streams treated in previous years. Water samples of seven different turbidities and with colorimeter readings from 0 to 400 were prepared with tap water.

Two sensing units were constructed, one with a single phototube and one with two phototubes. Both units contained a GE502 bulb with flashlight reflector for the light source. The phototubes and light were tested at several spacings until an optimum distance of 6 inches was determined. A spacing of less than 6 inches gave slightly better results at higher turbidities, but poor results at lower readings. This relation was reversed at a spacing of over 6 inches.

The sensitivity of the units was tested by placing each in the samples of various turbidities and adjusting to five different predetermined milliamp readings on the meter scale. Settings of 3.0, 3.4, 3.8, 4.0, and 4.2 were selected because relay CR1 closes at 4.6 milliamps and reopens at 3.0. (The closing point did not change significantly from 4.6 milliamps in tests at ambient temperatures from 20° to 80° F.) The minimum concentration of dye that would cause operation of the relay was recorded for each of the five settings. The optimum setting derived was 4.0 milliamps. At this setting, 0.4 p.p.m. of dye activated the relay throughout the range of turbidity; the time delay was kept sufficiently large to prevent possible voltage surges from accidentally activating the relay. Comparisons of the two sensing units for relative efficiency throughout the tests disclosed no significant difference.

The dye detector was used successfully during preparations for several treatments of streams with larvicide. These field tests did result in a few failures which can be avoided by heeding the following precautions for efficient operation: the battery

should be fully charged and the milliamp setting should be adjusted after 12 hours of operation; the sensing unit must be waterproof; enough dye should be used to give a concentration at the timing point high enough to activate the unit (a minimum of 0.4 p.p.m.); sensitivity must be checked and necessary adjustments made after 5 minutes of operation (capacitors in circuit must be allowed to stabilize); and the sensing unit should be so placed that neither direct nor reflected sunlight strikes the phototube.

Acknowledgments

Various members of the staff of the Bureau of Commercial Fisheries at Marquette, Michigan, contributed to the development of this instrument. Bernard R. Smith and Richard K. Kanayama advised and assisted in preparation of this manuscript.

Literature Cited

APPLEGATE, VERNON C., JOHN H. HOWELL, JAMES W. MOFFETT, B. G. H. JOHNSON, and MANNING A. SMITH
1961. Use of 3-trifluormethyl-4-nitrophenol as a selective sea lamprey larvicide. Great Lakes Fishery Commission, Technical Report No. 1, 35 p.

BUKSTEIN, EDWARD
1961. Industrial electronics measurement and control. Howard W. Sams and Co., Inc., Indianapolis, p. 19-22.

GOULD, EDWIN S.
1955. Inorganic reactions and structure. Henry Holt and Co., Inc., New York, 470 p.

WHITMER, MELVIN
1960. Experiments in industrial electronics. Howard W. Sams and Co., Inc., Indianapolis, p. 15.