566

Horizontal and Vertical Distribution of Juvenile Salmonids in Upper Mayfield Reservoir, Washington

SPECIAL SCIENTIFIC REPORT–FISHERIES No. 566

UNITED STATES DEPARTMENT OF THE INTERIOR
FISH AND WILDLIFE SERVICE
BUREAU OF COMMERCIAL FISHERIES

UNITED STATES DEPARTMENT OF THE INTERIOR
Stewart L. Udall, *Secretary*
David S. Black, *Under Secretary*
Stanley A. Cain, *Assistant Secretary for Fish and Wildlife and Parks*
FISH AND WILDLIFE SERVICE, Clarence F. Pautzke, *Commissioner*
BUREAU OF COMMERCIAL FISHERIES, H. E. Crowther, *Director*

Horizontal and Vertical Distribution of Juvenile Salmonids in Upper Mayfield Reservoir, Washington

By

JIM ROSS SMITH, JOHN R. PUGH, and GERALD E. MONAN

United States Fish and Wildlife Service
Special Scientific Report--Fisheries No. 566

Washington, D.C.
April 1968

CONTENTS

Horizontal and Vertical Distribution of Juvenile Salmonids in Upper Mayfield Reservoir, Washington

By

JIM ROSS SMITH, JOHN R. PUGH, and GERALD E. MONAN

Fishery Biologists
Bureau of Commercial Fisheries Biological Laboratory
Seattle, Washington 98102

ABSTRACT

The proposed installation of a fish collecting device in the upper end of Mossyrock Reservoir, soon to be created on the Cowlitz River in southwestern Washington, prompted this study to determine the horizontal and vertical distribution of juvenile salmonids in such an environment. A section of the upper end of Mayfield Reservoir, an existing body of water on the Cowlitz River, was systematically sampled with gill nets and a trawl from April 1964 to June 1965. Eighty-seven percent of the 11,467 salmonids captured were taken in the upper 7.3 m. of water, which constituted 52.8 percent of the total sampling area.

If the distribution of fish in upper Mossyrock Reservoir is similar to the distribution in Mayfield Reservoir, a collecting device running from shore to shore, extending to a depth of 7.3 m., and designed to collect fish approaching from both the upstream and the downstream sides should collect over 80 percent of all migrating salmonids.

INTRODUCTION

Development of hydroelectric power is gradually changing the fast-flowing rivers and streams of the northwestern United States to a network of reservoirs. This new environment can alter the migration rates of young salmonids, prolong their stay in fresh water, and subject them to increased predation.

Until recently, most of the effort to pass juvenile fish around hazardous turbines and spillways at high dams has been with collection systems at the lower ends of reservoirs, but even the most efficient of such systems would not be satisfactory if downstream migrants failed to reach the lower reservoir. Fishery agencies, therefore, are considering other methods, one of which is to collect migrants in the upper reservoir. The feasibility of such a system depends to a large extent on the distribution of the fish.

Rees (1957) investigated the distribution of seaward migrant salmonids in Baker Reservoir in northwestern Washington; Erho[1] studied the vertical distribution of smolts of coho salmon (*Oncorhynchus kisutch*) in Merwin Reservoir, southwestern Washington. Both of these studies, however, were conducted in the forebays, just above the dams.

A proposal by the Washington State Department of Fisheries to establish a collection site in the upper end of Mossyrock Reservoir, soon to be created on the Cowlitz River in southwestern Washington, led us to investigate the horizontal and vertical distribution of juvenile salmonids in upper Mayfield Reservoir, an established reservoir on the same river.

[1] Unpublished data. The vertical distribution of coho smolts in the forebay of Merwin Dam in 1964 by Mike Erho. Summary Report for the Fish-Passage Research Program, U.S. Bureau of Commercial Fisheries.

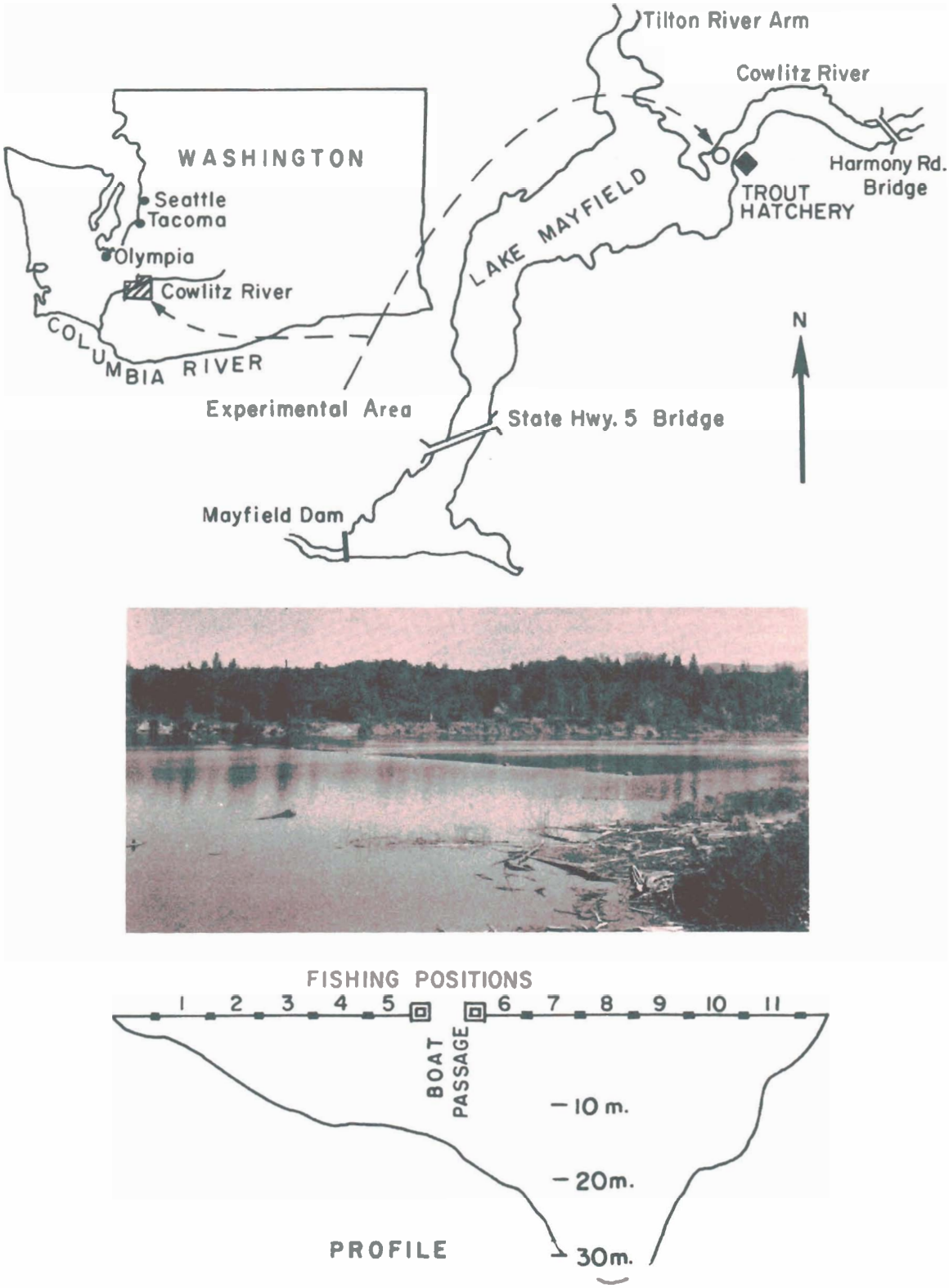

Figure 1.--Experimental area at Mayfield Reservoir and diagrammatic depth profile viewed from upstream side.

SAMPLING

The experimental area (fig. 1) was about 8.0 km. upstream from Mayfield Dam, near the Washington State Game Department Hatchery at Mossyrock, Wash.; the reservoir at this point is 219 m. wide and 30 m. deep. The distribution of juvenile salmonids was sampled with gill nets and a trawl.

Equipment

Gill nets were of monofilament nylon--each 18.3 m. long, 3.7 m. deep, and "hung on the half" (36.6 m. of netting on 18.3 m. of cork line). Three 6.1-m. panels, of 2.2-cm., 2.9-cm., and 3.5-cm. stretched measure, were joined to form each net (fig. 2). Respective strand sizes were 0.015 cm., 0.015 cm., and 0.02 cm. Each net was equipped with a lead line to make it hang properly and sufficient flotation to make the buoyancy neutral. The nets were marked and always set oriented in the same direction to enable us to differentiate between fish captured in the upstream and downstream sides.

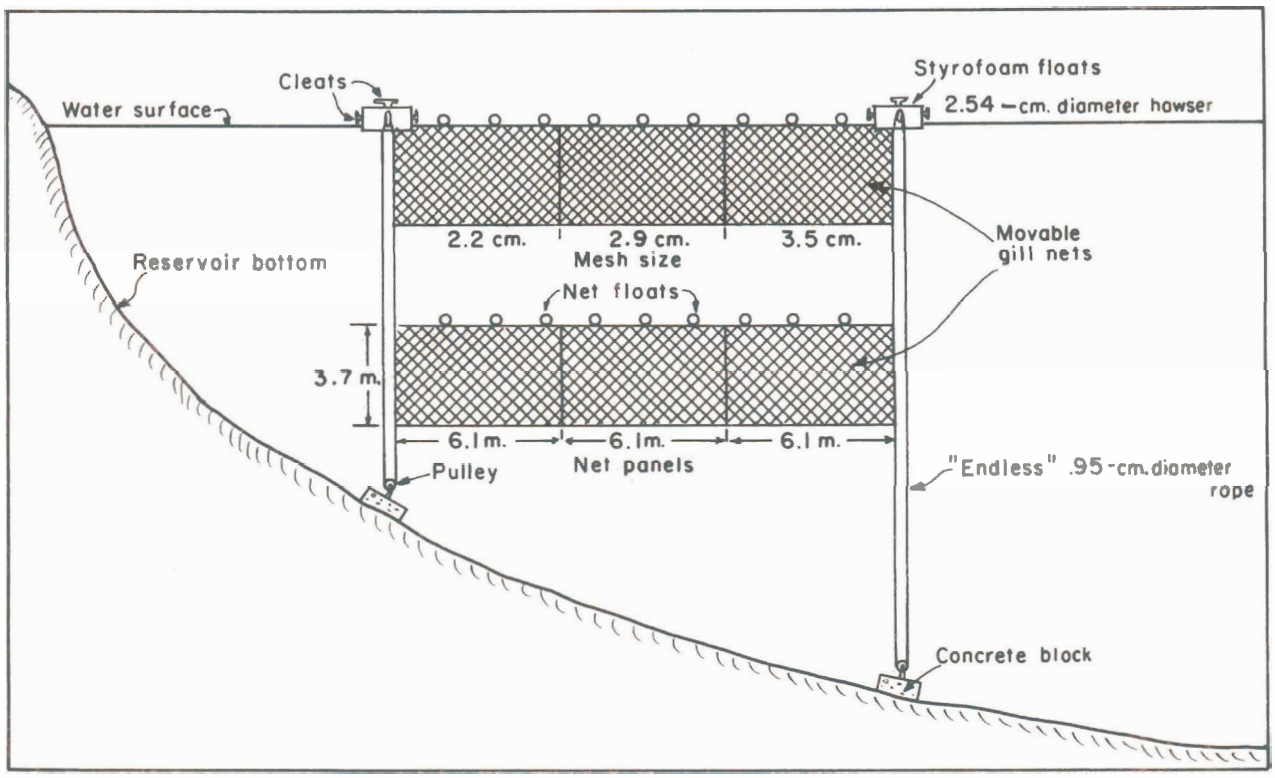

Figure 2.--System for suspending gill nets in Mayfield Reservoir.

Two rafts were anchored near the center of the reservoir 18.3 m. apart. The opening between the rafts facilitated boat passage. Polypropylene hawsers, stretched from each raft to the nearest shore at right angles to the water flow, served as reference lines to ensure that gill net sampling was always in the same cross section. The hawsers were marked at 18.3-m. intervals; a Styrofoam[2] float was attached at each mark, and a concrete block was positioned directly below each float. Each block was fitted with a pulley and an endless nylon rope that extended from the bottom to the surface. At the surface, each loop was secured to a float. Half of each loop

[2]Trade names referred to in this publication do not imply endorsement of commercial products by the Bureau of Commercial Fisheries.

was marked at 3.7-m. intervals to indicate depths of fishing.

The endless ropes and the positioning of the blocks made it possible to fish the gill nets at any desired depth in the reservoir's cross section. Spaces between floats constituted the fishing stations. The stations were numbered 1 to 11 from the left (south) shore to the right (north).

Trawling was done to determine the distribution of small salmonids not vulnerable to gill nets. The trawl (fig. 3) consisted of two

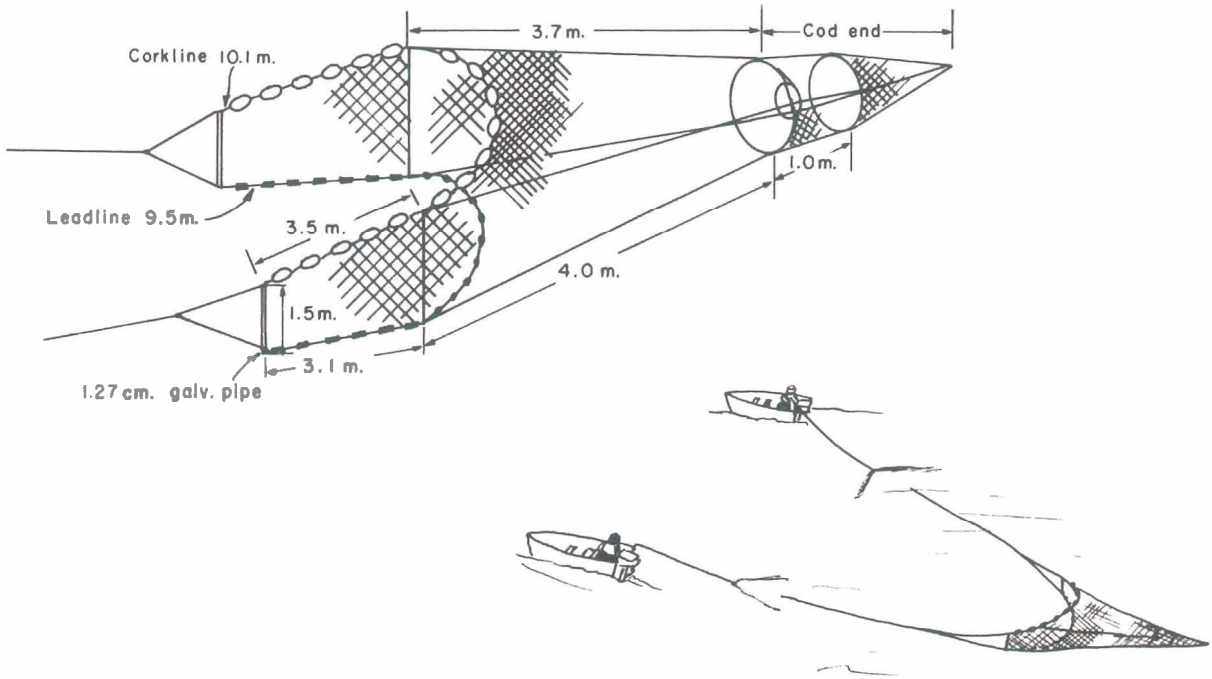

Figure 3.--Two-boat trawl used to sample distribution of juvenile salmonids in Mayfield Reservoir.

wings, a belly, and a cod end. The wings and belly were of 0.01-cm. knotted nylon twine, 2.2-cm. stretched measure; the cod end was of 0.02-cm. knotless nylon twine, 1.27-cm. stretched measure.

The fish were wild downstream migrants of the Cowlitz River system: coho salmon, chinook salmon (O. tshawytscha), rainbow trout (Salmo gairdneri), cutthroat trout (S. clarki), and squawfish (Ptychocheilus oregonensis).

Conditions and Procedures

The sampling varied with the abundance and size of fish, availability of equipment, and fluctuations in water velocity (table 1). The stations fished during each of the four sampling periods are shown in figure 4. Certain conditions were constant throughout the experiment:

1. Positions fished on any given day were predetermined, but the order of the fishing days within each sampling cycle was randomized.
2. Minimum space between nets was 3.7 m. vertically and 18.3 m. horizontally.
3. Position 11 (fig. 1) was sampled each operational day to note fish movement past the experimental site.

Trawls were towed 8 hours daily for 3 days during each week of the 4th sampling period. Times of sampling were varied (midnight to 8:00 a.m., 8:00 a.m. to 4:00 p.m., and 4:00 p.m. to midnight) to include all hours of daylight and darkness in each 3-day cycle; the order of these fishing periods was randomized. Each of the eight courses trawled was selected to correspond with a portion of the reservoir sampled with gill nets (fig. 5).

Table 1.--Summary of sampling by gill nets during Periods I to III and by trawl and gill nets during Period IV, Mayfield Reservoir

Sampling period and item		Remarks
Period I:		
Date	Apr. 7, 1964 to May 15, 1964	Water velocity less than 0.15 m.p.s. (meters per second) during 1st part of period; possible, wherever depth permitted, to fish three nets vertically. Became necessary to reduce sampling to two nets in a single column of water as velocity increased with spring runoff. Even after high flow subsided, only two nets fished in a single column of water to establish uniformity for remainder of experiment.
Number of nets fished daily	6	
Days required to sample cross section	4	
Total gill net sets	233	
Period II:		
Date	May 16, 1964 to June 9, 1964	Reservoir's cross section divided into three horizontal layers: Top (surface to 11.0 m.), middle (11.0 to 21.9 m.), and bottom (below 21.9 m.). Each layer systematically sampled 2 days in each 6-day cycle.
Number of nets fished daily	5 to 9	
Days required to sample cross section	6	
Total gill net sets	168	
Period III:		
Date	July 20, 1964 to Mar. 11, 1965	Selected positions at odd-numbered stations fished. Each of three general layers described under Period II sampled 1 day in each 3-day cycle.
Number of nets fished daily	5 to 9	
Days required to sample cross section	3	
Total gill net sets	189	
Period IV:		
Date	Apr. 12, 1965 to June 17, 1965	Gill net sampling, primarily to substantiate 1964 data. Primary sampling during this period was with a trawl.
Number of nets fished daily	5	
Days required to sample cross section	2	
Total gill net sets	97	

Gill nets were fished for 18 hours (2:00 p.m. to 8:00 a.m.); they were retrieved in the exact order in which they were set to equalize fishing time for all nets. After removal from the water, each net was placed in a separate plastic bucket that was marked to correspond with the fishing position. When all the nets were hauled, they were taken ashore and individually stretched across railings to permit examination of the catch and to determine the direction from which the fish entered the nets.

Turbidity was measured each operational day at three positions across the experimental site. Secchi disc readings ranged from 0.15 m. to 5.2 m. and averaged 1.9 m.

Water temperature was measured each morning at each fishing station before the net was removed from the water. Temperature ranged from 0.5 to 20° C. (average 8.9° C.) at the surface (0 to 11.0 m.); 3.3 to 14.4° C. (average 8.3° C.) at middepth (11.0 to 21.9 m.); and 7.2 to 12.2° C. (average 8.3° C.) at the bottom (below 21.9 m.).

The trawl was pulled between two boats along courses that were marked with buoys fitted with flashing lights to permit fishing

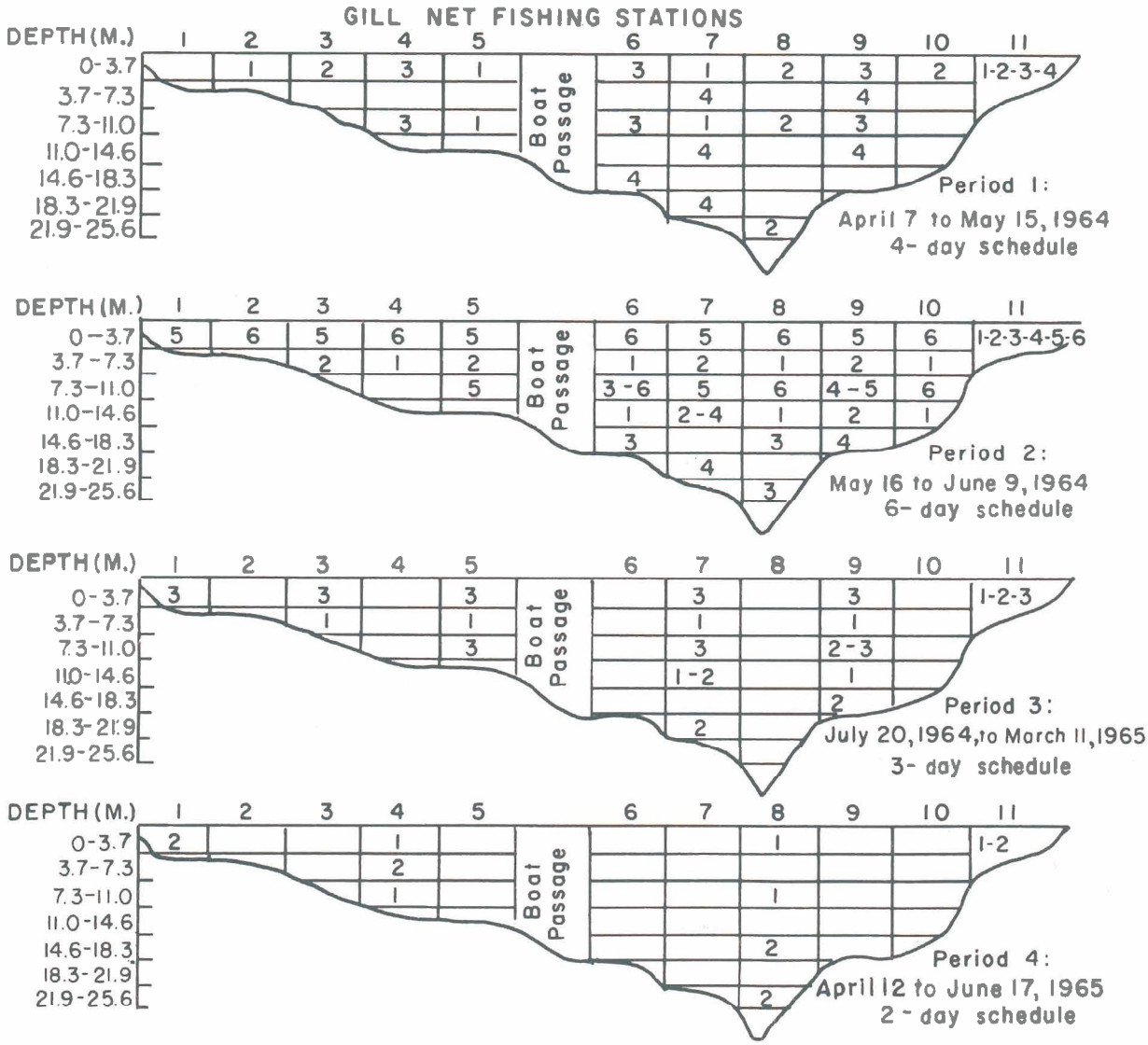

Figure 4.--Cross sections of gill net sampling area showing daily fishing schedule for each sampling period.

at night. Each trawl tow lasted about 15 minutes. The surface (0 to 3.7 m.), middle (11.0 to 14.6 m.), and bottom (21.9 to 25.6 m.) were sampled by towing the trawl at a speed of 2.3 km. per hour (1.8 knots) and by letting out 7.6, 45.7, and 76.2 m. of towing line, respectively, from each boat. The distance maintained between the boats was about equal to the length of towing line used.

After a tow was completed both boats stopped; the net was lifted from the water and the captured fish were identified, counted, and measured (fork length). To prevent repeated sampling of the same groups, the fish were taken to a holding tank and later released below Mayfield Dam.

The number of times each gill net and trawling station was sampled varied. To compare the relative abundance of fish among the gill net fishing stations, as well as among the eight trawling stations, a standard catch per unit of effort was defined as the total catch at any particular gill net or trawling station divided by the number of times that station was fished.

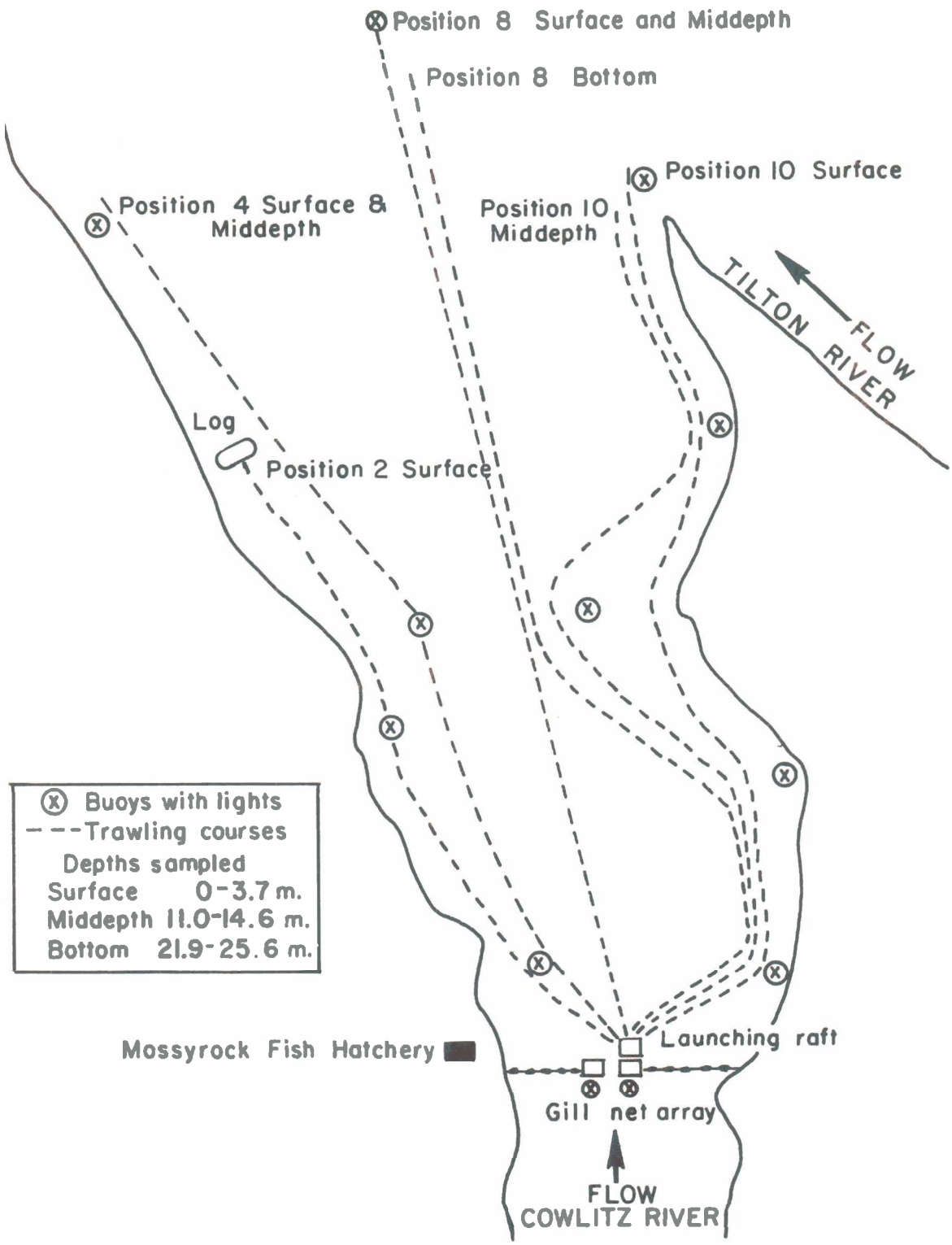

Figure 5.--Trawling courses and sampling depths, Mayfield Reservoir.

HORIZONTAL AND VERTICAL DISTRIBUTION OF JUVENILE SALMONIDS

The following analysis is based on 11,467 fish consisting of 60.5 percent coho salmon, 29.7 percent chinook salmon, and 9.8 percent rainbow trout. Although 236 cutthroat trout were captured, they are not included because of the small sample size. Squawfish was the only other common species; over 1,000 were netted.

The mesh size generally affected the size of fish captured. Fish between 85 and 125 mm. long were caught most effectively with 2.2-cm. mesh, fish between 110 and 140 mm. by 2.9-cm. mesh, and those between 140 and 210 mm. by 3.5-cm. mesh. Fish longer than 210 mm. were captured by all mesh sizes but were generally entangled only by their teeth.

Salmonids in age-group I were taken at all depths, but by far the greatest catch was made in the top 3.7 m. (table 2). Catches at individual stations generally declined as the depth increased. Migrants in the upper 3.7 m. were distributed completely across the experimental area but were slightly more concentrated adjacent to each shore. In terms of total area sampled, about 87 percent of the fish were captured in the top 7.3 m., which made up 52.8 percent of the total area sampled (table 3).

Table 2.--Horizontal and vertical distribution (percentage based on catch per unit of effort) of 3,378 chinook salmon, 6,553 coho salmon, and 1,098 rainbow trout captured by gill netting in upper Mayfield Reservoir (Cowlitz River) from April 1964 to June 1965

[Dashes indicate stations not sampled because of insufficient depth]

Species and depth (M.)	Gill net fishing stations											Total
	1	2	3	4	5	6	7	8	9	10	11	
						Percent						
Chinook salmon:												
0 - 3.7	15.3	5.0	6.1	3.2	4.9	0.4	3.9	1.6	5.7	2.9	8.0	57.0
3.7- 7.3	-	-	3.5	.9	5.2	1.9	3.2	2.0	3.8	1.6	-	22.1
7.3-11.0	-	-	-	.5	1.9	.1	2.3	.6	3.4	.8	-	9.6
11.0-14.6	-	-	-	-	-	.2	2.0	.8	2.6	1.1	-	6.7
14.6-18.3	-	-	-	-	-	0	0	.3	2.3	-	-	2.6
18.3-21.9	-	-	-	-	-	-	.9	.7	-	-	-	1.6
21.9-25.6	-	-	-	-	-	-	-	.4	-	-	-	.4
Total	15.3	5.0	9.6	4.6	12.0	2.6	12.3	6.4	17.8	6.4	8.0	100.0
Coho salmon:												
0 - 3.7	9.4	7.8	4.0	2.9	2.3	1.4	2.8	7.8	5.5	13.8	9.2	66.9
3.7- 7.3	-	-	.6	1.3	.6	4.6	1.0	8.1	.3	6.7	-	23.2
7.3-11.0	-	-	-	.2	.2	.4	.4	1.6	.7	2.0	-	5.5
11.0-14.6	-	-	-	-	-	.3	.3	.8	.5	1.4	-	3.3
14.6-18.3	-	-	-	-	-	0	.1	.2	.3	-	-	.6
18.3-21.9	-	-	-	-	-	-	.1	0	-	-	-	.1
21.9-25.6	-	-	-	-	-		-	.4	-	-	-	.4
Total	9.4	7.8	4.6	4.4	3.1	6.7	4.7	18.9	7.3	23.9	9.2	100.0
Rainbow trout:												
0 - 3.7	21.3	7.0	7.0	9.3	3.5	1.5	3.5	9.0	6.0	9.5	9.5	87.1
3.7- 7.3	-	-	-	.7	.3	1.3	.5	1.3	.3	2.5	-	6.9
7.3-11.0	-	-	-	.3	0	.3	.5	.2	.5	.7	-	2.5
11.0-14.6	-	-	-	-	-	1.3	.1	.6	0	.5	-	2.5
14.6-18.3	-	-	-	-	-	.3	0	.1	0	-	-	.4
18.3-21.9	-	-	-	-	-	-	.1	0	-	-	-	.1
21.9-25.6	-	-	-	-	-	-	-	.5	-	-	-	.5
Total	21.3	7.0	7.0	10.3	3.8	4.7	4.7	11.7	6.8	13.2	9.5	100.0

Table 3.--Percentages of salmonids of age-group I captured at various depths in relation to total area sampled in upper Mayfield Reservoir, April 1964 to June 1965

Depth	Area sampled	Portion of total fish captured	Portion of total area sampled
M.	M.[2]	Percent	Percent
0 - 3.7..	736.0	65.8	30.6
3.7- 7.3..	535.0	21.2	22.2
7.3-11.0..	468.0	6.5	19.4
11.0-14.6..	334.0	4.3	13.9
14.6-18.3..	201.0	1.2	8.3
18.3-21.9..	67.0	.6	2.8
21.9-25.6..	67.0	.4	2.8
Total....	2,408.0	100.0	100.0

Milling was extensive; 57 percent of all salmonids caught entered the nets from the upstream side and 43 percent from the downstream side.

The horizontal and vertical distribution of 225 salmonids of age-group I taken in the trawl (table 4) was similar to that of the salmonids taken by the gill nets during the same period (table 5).

Trawls captured 438 salmonids, of which 213 were age-group 0. These fish were caught at all trawling depths, but most were captured at night in the upper 3.7 m. of water and when the turbidity was high. Table 6 shows the distribution of 0-group salmonids captured by the trawl.

Table 4.--Horizontal and vertical distribution (percentage based on catch per unit of effort) of 225 salmonids of age-group I captured by trawling in upper Mayfield Reservoir, 1965

[Dashes indicate stations not sampled because of insufficient depth]

Depth	Trawling stations				Total
	2	4	8	10	
M.	Percent				Percent
0 - 3.7...	68.7	6.8	7.9	15.0	98.4
11.0-14.6...	-	.2	1.0	.2	1.4
21.9-25.6...	-	-	.2	-	.2
Total.....	68.7	7.0	9.1	15.2	100.0

Table 5.--Horizontal and vertical distribution (percentage based on catch per unit of effort) of 1,511 salmonids of age-group I captured by gill nets in upper Mayfield Reservoir (April 12 to June 17, 1965)

[Dashes indicate stations not sampled because of insufficient depth]

Depth	Gill net stations				Total
	1	4	8	11	
M.	Percent				Percent
0 - 3.7...	45.2	18.8	12.5	17.1	93.6
3.7- 7.3...	-	1.6	([1])	-	1.6
7.3-11.0...	-	1.7	1.3	-	3.0
14.6-18.3...	-	-	.7	-	.7
21.9-25.6...	-	-	1.1	-	1.1
Total.....	45.2	22.1	15.6	17.1	100.0

[1] No sample collected.

Table 6.--Horizontal and vertical distribution (percentage based on catch per unit of effort) of 213 salmonids of age-group 0 captured by trawling in upper Mayfield Reservoir, 1965

[Dashes indicate stations not sampled because of insufficient depth]

Depth	Trawling stations				Total
	2	4	8	10	
M.	Percent				Percent
0 - 3.7...	63.6	7.9	6.8	13.6	91.9
11.0-14.6...	-	1.2	1.2	2.3	4.7
21.9-25.6...	-	-	3.4	-	3.4
Total.....	63.6	9.1	11.4	15.9	100.0

EFFECT OF PHYSICAL ENVIRONMENT ON CATCH

Substantially larger catches were taken by the gill nets and the trawl during spring runoff, probably because the increased turbidity made the sampling gear less visible and perhaps because more fish were available due to a flushing action.

In the spring and summer of 1964, surface temperatures were generally higher than those at depths, but the experimental area had no definite thermocline. Water temperatures became stratified in the fall; between the surface and 21.3 m., the temperature decreased from 15.5° to 12.2° C. in September and from 12.2° to 9.9° C. in October. From November through February this section of the reservoir was nearly homothermous, and the percentage of fingerling chinook salmon captured in the upper layers decreased.

The mean monthly flow of the Cowlitz River during 1964-65, as recorded 25 km. upstream at Kosmos, Wash., was compared with monthly catches (fig. 6). Juvenile coho salmon and

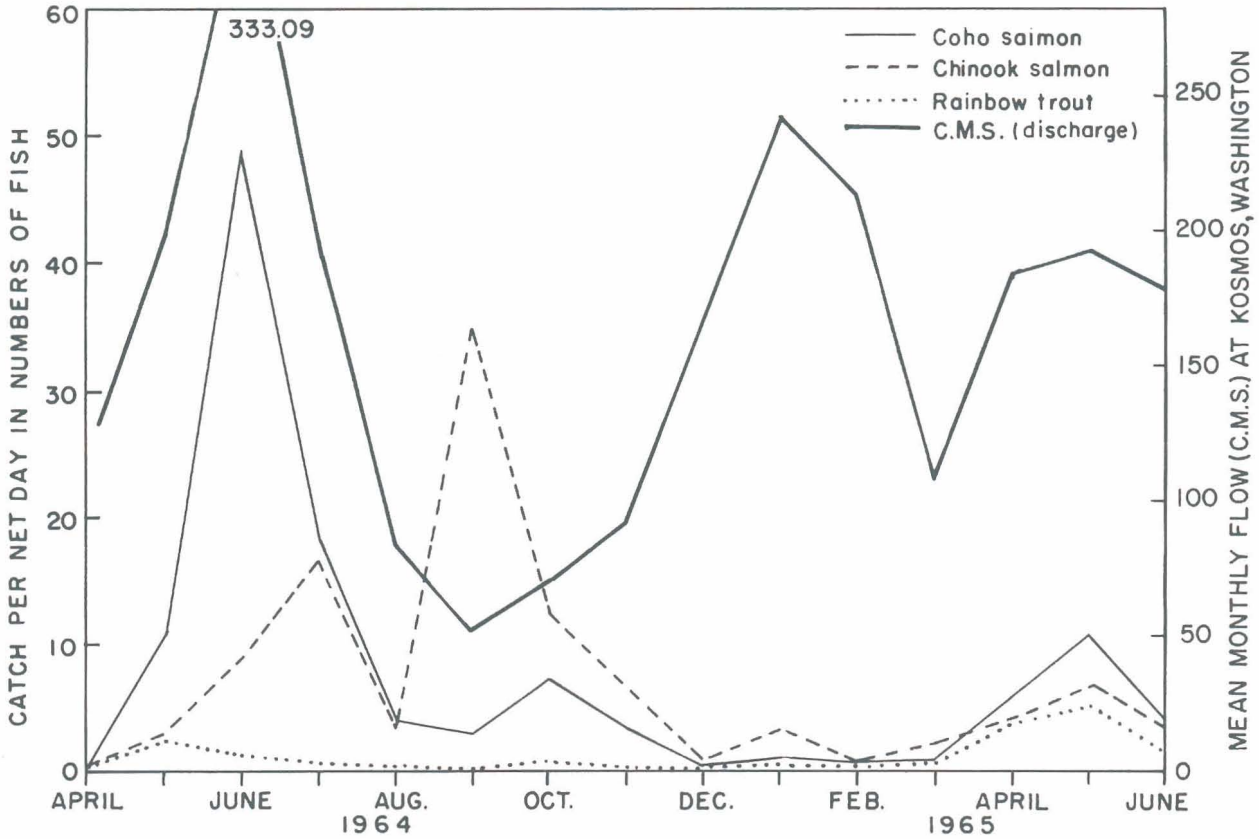

Figure 6.--Monthly changes in the catch of juvenile salmonids per net day in Mayfield Reservoir, and mean monthly flows in the Cowlitz River.

rainbow trout reached their greatest abundance during maximum water discharge in June; the largest catch of age-group I chinook salmon per unit of fishing effort was during the period of minimum water flow in September. Stockley[3] found a similar timing pattern for coho salmon; however, he found age-group I chinook salmon most abundant from October to January, the period of winter floods.

[3]Unpublished data. The migration of juvenile salmon past the Mayfield Dam site, Cowlitz River, 1955 and 1956. Washington State Department of Fisheries.

SUMMARY AND CONCLUSIONS

Information on the horizontal and vertical distribution of juvenile salmonids was needed to assess the feasibility of installing a collection system at the upper end of Mossyrock Reservoir, soon to be formed on the Cowlitz River near Mossyrock, Wash. Monofilament nylon gill nets were systematically fished across a section of the upper end of Mayfield Reservoir, an established reservoir on the same river, from April 6, 1964, to June 17, 1965. Trawling was done during the spring of

1965 to determine the distribution of salmonids not vulnerable to gill netting.

Eighty-seven percent of the salmonids captured by the gill nets and the trawl were netted in the upper 7.3 m. of water, which constituted 52.8 percent of the area sampled. Migrants in the upper 3.7 m. of the reservoir were distributed completely across the experimental area, but slightly higher numbers were caught adjacent to each shore.

Trawling indicated that salmonids of age-group 0 were distributed throughout the upper end of the reservoir. Their horizontal and vertical distribution was similar to that of salmonids of age-group I, sampled during the same period by gill nets along a cross section just upstream from the trawling area. Over 90 percent of all the juvenile salmonids captured by trawling were taken in the upper 3.7 m. of water.

Movement in the experimental area was not strongly downstream; 57 percent of the salmonids entered the nets from the upstream side and 43 percent from the downstream side.

Juvenile coho salmon and rainbow trout were most abundant during maximum water flow in June, whereas juvenile chinook salmon were predominant during the period of minimum flow in September. The gill nets and trawl captured fish more effectively when the water was very turbid.

If the distribution of fish in upper Mossyrock Reservoir is similar to that in Mayfield Reservoir, a collecting device running from shore to shore, extending to a depth of 7.3 m., and designed to collect fish approaching from both the upstream and downstream sides should collect over 80 percent of all migrating salmonids.

ACKNOWLEDGMENTS

A. Westrope, Superintendent of the Mossyrock Trout Hatchery (Washington Department of Game) and his staff assisted us. The Water Resources Division of the U.S. Geological Survey provided us with unpublished hydrological data.

LITERATURE CITED

REES, WILLIAM H.
1957. The vertical and horizontal distribution of seaward migrant salmon in the forebay of Baker Dam. Fish. Res. Pap., Wash. Dep. Fish., 2(1): 5-17.

MS. #1700

GPO 935-765

Created in 1849, the Department of the Interior--a department of conservation--is concerned with the management, conservation, and development of the Nation's water, fish, wildlife, mineral, forest, and park and recreational resources. It also has major responsibilities for Indian and Territorial affairs.

As the Nation's principal conservation agency, the Department works to assure that nonrenewable resources are developed and used wisely, that park and recreational resources are conserved for the future, and that renewable resources make their full contribution to the progress, prosperity, and security of the United States--now and in the future.

UNITED STATES
DEPARTMENT OF THE INTERIOR
FISH AND WILDLIFE SERVICE
BUREAU OF COMMERCIAL FISHERIES
WASHINGTON, D.C.

OFFICIAL BUSINESS

Return this sheet to above address, if you do NOT wish to receive this material ☐, or if change of address is needed ☐ (indicate change including ZIP Code).

POSTAGE AND FEES PAID
U.S. DEPARTMENT OF THE INTERIOR
THIRD CLASS