Biological Design Criteria for Juvenile Fish Passage, 1998: High-Velocity Flume Development and Improved Wet-Separator Efficiency

R. Lynn McComas, Michael H. Gessel, Benjamin P. Sandford,
and Douglas B. Dey

Report of Research by

Fish Ecology Division
Northwest Fisheries Science Center
National Marine Fisheries Service
National Oceanic and Atmospheric Administration
2725 Montlake Boulevard East
Seattle, Washington, 98112-2097

to

U.S. Army Corps of Engineers
Walla Walla District
201 North 3rd Street
Walla Walla, Washington, 99362
Delivery Order E86910060

December 2001

EXECUTIVE SUMMARY

During the 1998 spring and summer juvenile salmonid migrations, we continued research to provide biological design criteria for the improvement of conventional juvenile salmonid wet separators, which are currently in use in fish passage facilities at hydroelectric dams on the Snake and Columbia Rivers. In addition, we conducted evaluations to develop the high-velocity flume (HVF) wet separator and tested a preliminary adult and debris separator designed to remove large fish and debris before they reach the juvenile wet separator. Both the conventional and HVF separator units were used to trap river-run smolts from Gatewell 6B at McNary Dam.

Testing for conventional separator improvement was conducted in a unit simulating the wet-separators presently used at the dams. In this unit, six treatments were evaluated to compare the effects of alternate separation-bar spacings (16, 17, and 19-mm), and flow diverters (with or without diverters) on salmonid separation efficiency, separator exit efficiency fish (passage through the separator unit), and fish condition (descaling).

Results from these tests indicated that separation efficiency values for all salmonid smolts evaluated during the spring migration (total catch) were significantly higher with 19-mm bar spacing than with 16-mm spacing, but were not significantly different between 16- and 17-mm or between 19- and 17-mm bar spacing. For the total catch, separation efficiency was also significantly higher with flow diverters deployed than when they were not used. For subyearling chinook salmon, separation efficiency exhibited a similar trend among bar spacing conditions, but displayed no difference with respect to the flow diverter.

There was a significant interaction between conditions affecting separator exit efficiency for the total catch during the spring, but not for subyearling chinook salmon. Mean descaling values were statistically similar among treatments involving both fish groups, and interaction between conditions was not significant for descaling.

In the high-velocity flume (HVF) separator, separation efficiency, exit efficiency, and descaling were again evaluated. Treatments for the HVF evaluations consisted of 12 combinations of alternate separation-bar spacing (13, 16, and 19 mm), alternate separation-bar array orientation in relation to the water surface (0° and 4° angle), and alternate water velocity (1 and 2 m/s).

Using the HVF during the spring outmigration, we found that mean separation efficiency for the total juvenile salmonid catch showed a significant interaction among all three conditions. Separation was nearly identical using 16-mm and 19-mm bar spacing with 1 m/s water velocity and with a flat separation-bar array, and both values were

significantly higher than mean values for all other treatments. Subyearling chinook salmon separation efficiency values were statistically higher at 1 m/s than at 2 m/s water velocity, and higher using the flat separation-bar array than the angled array.

Most separator exit efficiency comparisons using the HVF revealed a significant interaction between water velocity and separation-bar array angle. Exit efficiency was generally higher at 2 m/s than at 1 m/s, and higher using the flat separation-bar array than the angled array.

Comparisons among descaling values during spring using the HVF were not significantly different among any treatment conditions during the spring, and there were no significant interactions among descaling comparisons during either migration period. However, for fall chinook salmon, descaling values were significantly higher in treatments with water velocity at 2 m/s than at 1 m/s.

Initial evaluation of a prototype adult and debris separator showed the design to be about 85% effective at rerouting large fish before they entered the juvenile wet separator. The design also removed larger or more dendritic debris, but was ineffective at intercepting smaller particles.

CONTENTS

EXECUTIVE SUMMARY. iii

INTRODUCTION. 1

OBJECTIVE 1: EVALUATE SEPARATION-BAR SPACING AND FLOW DIVERTERS IN A CONVENTIONAL WET SEPARATOR. 3
- Approach. 3
- Results and Discussion. 8
  - Separation Efficiency. 9
  - Separator Exit Efficiency. 11
  - Fish Condition. 12

OBJECTIVE 2: EVALUATE SEPARATION-BAR SPACING, WATER VELOCITY, AND SEPARATION-BAR ARRAY ORIENTATION IN A HIGH-VELOCITY FLUME WET SEPARATOR. 15
- Approach. 15
- Results and Discussion. 16
  - Separation Efficiency. 17
  - Separator Exit Efficiency. 24

OBJECTIVE 3. EVALUATE A PROTOTYPE ADULT AND DEBRIS SEPARATOR. 27
- Approach. 27
- Results and Discussion. 29

CONCLUSIONS AND RECOMMENDATIONS. 31
- Conventional Wet Separator. 31
- High-Velocity Flume Wet Separator. 31
- Adult and Debris Separator. 32

ACKNOWLEDGMENTS. 33

REFERENCES. 35

APPENDIX: Data Tables. 37

INTRODUCTION

Separation of smolts by size is a key objective of juvenile bypass systems at hydroelectric dams on the Columbia and Snake Rivers. Juvenile chinook salmon (*Oncorhynchus tshawytscha*) that are transported with juvenile steelhead (*O. mykiss*, which are generally larger than chinook salmon smolts) may experience higher levels of stress than those transported with other chinook salmon (McCabe et al. 1979, Congleton et al. in press). In addition to stress reduction, separation provides management options based on different size classes.

Separation at U.S. Army Corps of Engineers (COE) operated facilities has evolved from an initial 'dry' separation process, where fish were sorted using inclined pipes (McComas et al. 1998), to a wet separation approach. The conventional wet separator used in bypass facilities at COE projects is similar to that developed and evaluated by Gessel et al. (1985). Since the conventional separator keeps fish submerged, it is considered less stressful to migrants; the separation process relies primarily on behavioral responses to induce smolts to attempt to sound (dive) between separation bars just under the water surface.

Details of the wet separation process are described and diagramed by McComas et al. (1998). Briefly, conventional wet separators use a three-stage separation process designed to remove small fish first; then larger smolts; and finally adult salmonids, non-salmonid incidental species, and debris. The spacing of separation bars in successive compartments of the separator determines the size of fish able to sound at each stage. Under ideal conditions, the first compartment, or "A" section, would segregate smaller smolts such as chinook, coho (*O. kisutch*), and sockeye (*O. nerka*) salmon from the larger, predominantly steelhead smolts, which are sorted in the B section.

In practice, there are several problems with conventional wet separators. First, the conventional separators have had sporadic failures in separation efficiency. For example, at McNary Dam in 1994, separation efficiency values from the "A" section of the separator were 32.2, 24.1, and 27.7% for yearling chinook, coho, and sockeye salmon respectively (Brad Eby, U.S. Army Corps of Engineers, McNary Dam Juvenile Fish Passage Facility, Umatilla OR, 97882, Pers. commun., July 1995). These failures may have been caused by flow surges, which carry small fish through the first section with insufficient time to sound through the separation bars, or by inadequate stimulus to generate a sounding (diving) response in fish in the separator unit.

Second, video monitoring associated with behavior and physiology studies has indicated that fish also hold under the separator bars for extended periods, rather than exiting expeditiously from the separator unit (Shreck et al. in prep). This work suggests that fish may exit the separator unit only after becoming fatigued by prolonged resistance to the hydraulic conditions within the unit. If this is the case, the conventional separator may be contributing to increased overall stress, which could ultimately effect survival.

To address these concerns, we continued research during the 1998 spring and summer migration periods to increase salmonid smolt separation efficiency in conventional wet separators. These studies centered on developing biological design criteria for conventional separators by analyses of the spacing between separation bars and by the use of flow deflectors above the bars.

In addition, we continued work on the high-velocity flume (HVF) wet separation concept, which arose from interagency brainstorming sessions. Preliminary studies to evaluate the extent to which smolts will sound between separation bars in a high-velocity environment were conducted in a small flume at McNary Dam during the latter part of the fall chinook migration in 1996 (McComas et al.1998). Results demonstrated that if sufficient separation-bar length is available, a substantial proportion of fall chinook salmon will sound between separation bars at higher velocities than are normally present in existing wet separators.

Preliminary evaluations of a HVF separator design in 1997 compared 24 treatments involving combinations of water velocity, water depth above the separation bars, separation-bar array length, and orientation of separation bars in relation to the water surface. Promising results were obtained at a water velocity of 1 m/s, 5-cm depth over the separation bars and with 12-m-long separation bars oriented parallel to the water surface (McComas et al. 1998). In 1998 we continued to develop HVF criteria by considering the relationship among separation-bar array orientation, spacing between the separation bars, and water velocity.

In currently operating wet-separator units large incidental species, adult salmonids, and debris are delivered to the separator along with outmigrant smolts. Larger fish pass completely through both separator sections to a removal sump at the end of the unit, and debris must be removed by hand before clogging the separator or causing injury to juvenile fish. A more appropriate sequence would be to remove trash and large fish before they enter the juvenile portion of the separator. Therefore, in 1998, we also began evaluating a system for eliminating large fish and debris upstream from the juvenile fish wet separator. Specific research objectives in 1998 were these:

1) Evaluate the effects of separation-bar spacing and flow diverters on juvenile salmonid separation, separator exit efficiency, and descaling in a simulated conventional wet separator.

2) Evaluate the effects of separation-bar spacing, water velocity, and separation-bar array orientation on juvenile salmonid separation, separator exit efficiency, and descaling in a high-velocity flume wet separator.

3) Conduct preliminary evaluation of an experimental device for removing adult salmonids, large incidental species and debris prior to entry into a wet separator.

OBJECTIVE 1: EVALUATE SEPARATION-BAR SPACING AND FLOW DIVERTERS IN A CONVENTIONAL WET SEPARATOR

Approach

A full-sized separator unit was fabricated to simulate the function of the small fish section of a conventional wet separator, similar to those in use at McNary and Lower Monumental Dams (McComas et al. 1998). A full-sized separator section was used for the simulated unit so that beneficial changes found could be adapted to existing conventional wet separators without requiring major revisions. The simulated conventional wet separator measured 1.52 m wide, 3.96 m long and 1.2 m high (5 x 13 x 4 ft)(Fig. 1). Maximum water depth was 0.8 m, with add-in water supplied through a 25.4-cm (10-in) siphon drawing water from the forebay.

Several modifications were built into the simulated unit to reduce or eliminate functional weaknesses known to impede operation in conventional wet separators. Major modifications to this basic unit involved removal of the downwell sump located in the downstream end of operational separators, and reduction and redirection of add-in water

In operational separators, a downwell sump serves as the entrance to an exit orifice for fish which have sounded between the separation bars (separated fish). However, video recordings of behavior near the sump entrance have shown that accelerating water velocities through the downwell cause smolts to resist entering the sump by swimming vigorously against the flow (James L. Congleton, Pers. commun., Idaho Cooperative Fish and Wildlife Research Unit, Department of Fish and Wildlife, University of Idaho, Moscow, ID 83844-1141, March 1995), suggesting delayed migration and increased stress as a result of hydraulic conditions within the unit.

Therefore, the area containing the downwell sump was eliminated from the simulated unit by installing a vertical partition 61 cm (2 ft) from the downstream end and horizontally across the width of the unit. The partition supported the downstream end of the separation-bar array at a height which allowed approximately 3-cm (1.25 in) water depth over the separation bars, forming the overflow orifice for fish not passing between the bars (non-separated fish, Fig. 1).

The other major difference between the simulated separator unit and an existing operational wet separator involved the make-up water delivery system, and this in turn is linked to placement of the submerged exit orifice. Conventional wet separators presently in operation have a submerged exit orifice approximately 1.5 m (5 ft) below the water surface. In addition to a direct drain supply furnishing water directly to the orifice, the volume of water needed to support a downwell orifice at this depth is furnished by forced

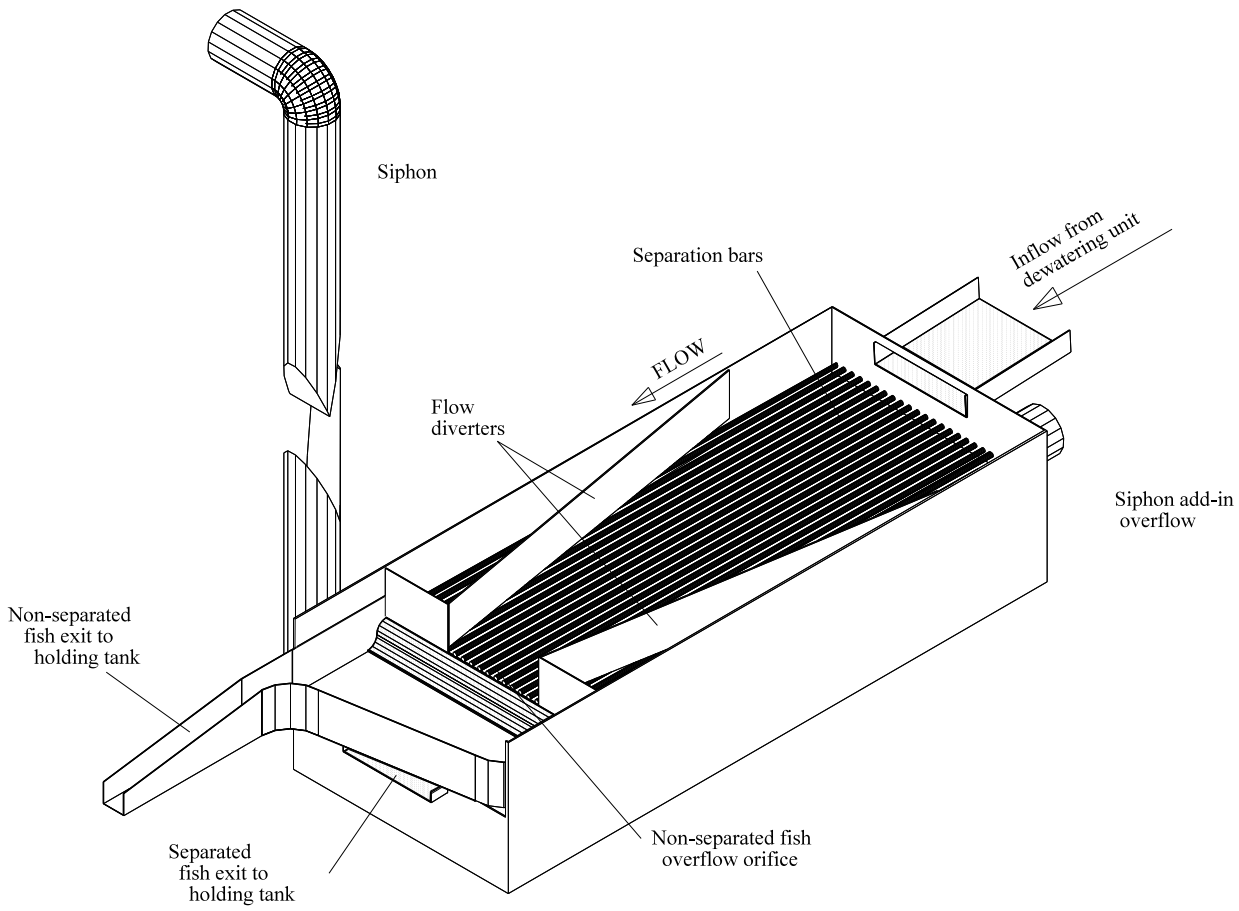

Figure 1. Relationship among components of the simulated conventional wet separator unit used during biological design criteria studies at McNary Dam, 1998.

upward flow through a perforated-plate false bottom at three points along the longitudinal centerline of each separator section. Fish have been seen swimming into this flow, in a head-down orientation toward the perforated plate. This hydraulic situation contributes to increased holding time in the separator and probably to increased fatigue and stress.

Previous studies using test separators have demonstrated that a shallower orifice configuration can be more efficient at passing fish than an orifice deeper in the water column (McComas et al. 1998). The bottom of the submerged orifice in the simulated unit was placed 23 cm (9 in) below the water surface to reduce velocity and volume through the opening. The submerged orifice measured 7.6 by 61 cm (2 x 24 in), and was centered in the partition at the downstream end of the unit. A perforated plate false bottom sloped from the bottom edge of the submerged orifice to 15 cm (6 in) below the water surface at the upstream end of the separator.

Make-up water was also redirected to eliminate the upward flow component that appeared to attract fish. A 24.5-cm (10-in) PVC tube through the longitudinal centerline, and along the floor of the separator under the false bottom, received water from the siphon. Flow was regulated by 24.5-cm (10-in) valves on both ends of this tube. Four lateral 10-cm (4-in) pipes were attached to each side of the 24.5-cm tube, and each pipe was equipped with double rows of 1-cm (3/8-in) holes directed toward the floor at approximately 30° to the vertical. This arrangement dispersed make-up water inflow throughout the separator with no apparent upwelling.

Separation bars were contained in arrays oriented parallel to flow along the long axis of the simulated unit, and sloped from 7.6 cm (3 in) below the water surface at the upstream end to 3 cm (1.25 in) below the surface at the downstream end. Each array consisted of two panels, 0.76 m wide and 3.35 m long (2.5 x 11 ft), with individual bars of 25.4-mm-id (1-in) aluminum tubing. Three interchangeable arrays were constructed, with nominal spacings of 16, 17, and 19 mm (0.625, 0.6875, and 0.75 in) between individual bars.

With the described configuration, fish entering the simulated separator were allowed unrestricted access to the overflow orifice across the entire separator width, similar to conditions in a conventional separator. Poor separation in conventional units results in part from small fish passing over the overflow orifice without attempting to sound between the separation bars. In addition, larger fish tend to hold in the upstream portion of the small fish section for long periods, reducing exit efficiency.

It is possible that this holding behavior may be an avoidance response to the abrupt flow acceleration at the interface between the overflow orifice and the relatively low separator flow. A progressive increase in velocity through the length of the unit could encourage larger smolt egress by making the flow transition less rapid. To test this

possibility, two flow diverters were fabricated to channel flow over the overflow orifice through a smaller area in the center of the orifice (Fig. 1).

Flow diverters were intended to create a gradual increase in velocity along their length, thus avoiding a precipitous increase in velocity at the overflow. Diverters consisted of removable 2.7-m (9-ft) aluminum wings inclined from the sides of the unit across the separator bars so that non-separated fish passage was confined to a 61-cm (2-ft) opening in the center of the unit. A shorter 46-cm (1.5-ft) wing extended horizontally from the side to the angled wing to restrict overflow above the bars to the center opening.

With reduced length due to the downwell modification and without flow diverters in place, total area of the separation bars in the simulated conventional separator unit was 5.11 m^2 (55 ft^2), or approximately 85% of the total area available in one section of an operational separator (5.85 m^2, 65 ft^2). Flow diverters further reduced the available area to 3.86 m^2 (41.5 ft^2), or 64% of the total in an operational unit section.

To evaluate the effects of separation-bar spacing and flow diverters on separation and exit efficiency, treatments were randomized in blocks, each consisting of one of the following 6 combinations of separation-bar spacing and flow diverter conditions:

	Condition	
Treatment	Separation-bar spacing (mm)	Flow Diverters
1	16	off
2	16	on
3	17	off
4	17	on
5	19	off
6	19	on

Before initiating a replicate, water depth in the separator was stabilized at approximately 2 cm (0.8 in) depth over the overflow orifice. River-run (test) fish were introduced into the simulated conventional separator through an opening in the upper end along with dewatered flows from the north orifice of Gatewell 6B. A replicate was initiated by opening the gatewell orifice, which allowed test fish to enter the unit along with enough additional inflow to raise the depth across the separator overflow orifice to approximately 3 cm (1.25 in). Fish exiting through the two separator orifices were detained in separate holding tanks for examination. Replicate duration was dependent on numbers of fish entering the separator rather than on time. After more than 25 chinook salmon had entered the simulated unit, recruitment was halted by closing the gatewell orifice.

After the replicate was ended, test fish were collected first from above, then from below the separation bars within the separator unit. Animals from the two holding tanks were examined last. Each group was anesthetized separately using tricane methane sulfonate (MS-222) and enumerated by species and categorized by length group as less than 180 mm fork length (<180 mm) or greater than or equal to 180 mm fork length (180 mm). Fish condition was also noted as percent descaling for each species using current Fish Transportation Oversight Team descaling criteria (Ceballos et al. 1992). Nearly all salmonid smolts during the spring migration, and a representative portion of the chinook salmon catch from the summer migration, were measured to fork length (FL).

One test series was completed during the spring migration, and one during the summer migration, with both series involving multiple blocks of the six treatments. Blocks and treatments within blocks were performed sequentially. The order of flow diverter treatments within separation bar spacing treatments, and the order of bar spacing treatments within each block, was random. However, for implementation purposes, both flow diverter treatments were completed at a given separation-bar spacing before changing to the next bar spacing in the block.

A total of 54 replicates (9 for each treatment) were completed during the spring migration test period from 27 April through 1 June. From 27 April through 4 May, all work was accomplished between 0600 and 1400. Low fish numbers prompted the addition of a second shift (1400-2200) beginning 5 May, and a third shift beginning 25 May (2200-0600) so that tests were conducted 24 hours each day for the remainder of the spring migration. All testing was completed between 0600 and 1400 during the summer migration period from 22 June through 30 July, resulting in 90 replicates (15 per treatment). No testing was done between 5 June and 22 June.

Separation efficiency (SEF) was calculated similarly for both length groups, as the number of separated fish, by species, in a given length group compared to the total number of smolts from that group entering the separator during the test interval:

$$SEF = \frac{F}{T} \times 100\% \qquad (1)$$

Where: *SEF = separation efficiency*
F = number of separated fish
T = total number of fish entering the evaluation separator

However, separation has a somewhat different behavioral implication for each of the two length groups. For smolts <180 mm, separation efficiency was calculated using the fraction which sounded between the separation bars, whereas separation efficiency of fish 180 mm was calculated using the fraction which did not sound between the bars.

Total separation efficiency was calculated using the number of fish from each group which separated properly as the number of separated fish.

Separator exit efficiency (SEE) was calculated by species as the proportion of fish in each size group having exited the simulated conventional wet separator compared to the total number of fish in that group that entered the separator during the test interval:

$$SEE = \frac{A}{T} \times 100\% \qquad (2)$$

Where: SEE = *orifice exit efficiency*
A = *fish number of fish from size group A exiting orifice*
T = *total number of fish from group A entering the separator*

Following recovery from anesthetic, all fish were released directly into the juvenile fish bypass channel.

Results and Discussion

A total of 6,860 smolts were included in treatment comparisons using the simulated conventional wet separator during the spring migration. Yearling chinook salmon <180 mm composed approximately 40% of the catch, while steelhead 180 mm composed about 14.9%. For the summer migration period, subyearling chinook salmon made up over 99% of a total catch of 15,535 smolts. Salmonid catch data are presented by replicate in Appendix Table 1, with non-target incidental catch in Appendix Table 2.

Since changing the separation-bar arrays placed practical restrictions on the order of separation-bar treatments, the sequence of treatments within each block was not entirely random. Rather, a given bar spacing was set, and all flow-diverter conditions were evaluated for treatments within a block before the next bar spacing was evaluated. Normally, this non-random effect is analyzed using a split-plot procedure (Petersen 1985). In this case, "large plots" were two consecutive tests and "small plots" were individual tests. Variability in sampled fish stocks and environmental conditions was assumed to differ between "large" and "small" time plots.

However, results from actual field testing precluded the statistical power in distinguishing between these two plot sizes, because the actual time between tests in the same “large time plot” was sometimes longer than the time between tests in different “large time plots.” For example, Treatments 1 and 2 could be considered components of Large Time Plot 1, Treatments 3 and 4 of Large Time Plot 2, and Treatments 5 and 6 of Large Time Plot 3. However, in Replicate 5 (Appendix Table 1), because all tests were conducted during a 5-day work week, with interruptions to the series occurring each

weekend, Treatments 3, 4, and 6 were completed on 8 May, and Treatment 5 was not effected until 11 May. Therefore, Treatments 3 and 4 were actually sampled closer in time to Treatment 6 than Treatments 5 and 6. This type of disruption happened often enough that we did not expect the "large time plots" and "small time plots" to differ much in their respective variances. However, there was variation over the course of each migration period. Consequently, data were analyzed using a randomized block analysis of covariance (ANCOVA) statistical design.

A further divergence from the study design was that for several individual replicates, the minimum sample size criteria of 25 fish per test was not met. Therefore, datasets were analyzed using combined data from adjacent replicates (of the same treatment) until that minimum was attained. The analyses for these datasets were thus reduced to completely randomized analyses of variance (ANOVA).

A split-plot block ANOVA analysis (date groupings being the blocks) was conducted where possible (mostly total species) and little difference was found between error terms and/or results from the less restrictive analyses of covariance (date being the covariate). Therefore, the results of the analyses of covariance or the completely randomized ANOVA are presented.

The ANOVA procedure was used to determine the significance of observed mean differences among treatments by length group (<180 mm fork length, 180 mm fork length, and total catch) for each species and by length group the for the total salmonid catch. For each group separation efficiency, separator exit efficiency, and descaling were analyzed.

From the spring chinook migration period, significant numbers of smolts were available for analysis for chinook salmon <180 mm, total chinook salmon catch, steelhead 180 mm, total steelhead catch, sockeye salmon <180 mm, total salmonids <180 mm, total salmonids 180 mm, and total salmonid catch. Subyearling chinook salmon <180 mm comprised the only group with sufficient numbers of valid replicates for analysis during the summer migration. Since virtually all sockeye and subyearling chinook salmon were <180 mm, a separate analysis was not done for total catch for these species.

Separation Efficiency

Complete results of statistical analyses among separation efficiency comparisons using the simulated conventional wet separator are presented in Appendix Table 3. In general, separation efficiency increased for length groups <180 mm and decreased for fish 180 as separation-bar spacing increased. Flow diverter conditions showed a similar general increase in separation for fish from smaller fish groups and a decrease for larger fish with diverters on (deployed) compared to the off (not deployed) condition.

Mean yearling chinook salmon separation efficiency for fish <180 mm was significantly different among separation-bar spacing treatments analyzed across flow diverter conditions (F = 13.10, df = 2, P = 0.000) and between flow diverter treatments (F = 14.35, df = 1, P = 0.001). However, there was no interaction among the two conditions (F = 1.53, df = 2, P = 0.230). Mean separation efficiencies were 55% (SE = 2.3), 64% (SE = 2.4), and 72% (SE = 2.4) for the 16, 17, and 19-mm separation-bar treatments, respectively.

Fisher's protected least significant difference (LSD) revealed that all three means were significantly different from each other, indicating that smaller yearling chinook salmon separated differently with as little as 2 mm (0.08 in) difference in separation-bar spacing. Similarly computed values were 59% (SE = 1.9) with flow diverters on and 69% (SE = 1.9) with diverters off. When yearling chinook salmon 180 mm were combined with the smaller fish group to form the total chinook salmon catch, there were no significant separation efficiency differences among any of the treatment conditions.

Steelhead separation efficiency was significantly lower (F = 9.10, df = 2, P = 0.002) using the 19-mm separation-bar spacing (80%, SE = 2.9) than with either the 16-mm bar spacing (96%, SE = 2.1) or the 17-mm spacing (90.8, SE = 2.9) for fish 180 mm long. There was no difference among any of the treatments for the total steelhead catch, and no interaction among treatment conditions for either group.

Only sockeye salmon <180 mm exhibited a significant interaction between flow-diverter and bar-spacing conditions (F = 4.15, df = 2, P = 0.025). Among the six treatments, separation efficiency for sockeye salmon was as follows:

Treatment conditions		Separation efficiency (%)	
Separation-bar spacing	Flow diverter	Mean	SE
16 mm	off	66.9	5.2
16 mm	on	79.8	5.6
17 mm	off	78.9	5.6
17 mm	on	62.6	5.6
19 mm	off	77.9	5.6
19 mm	on	87.5	5.2

Fisher's LSD indicated that mean separation using the 16-mm separation-bar spacing without a flow diverter and using 17-mm spacing with a flow diverter were statistically similar, and significantly lower than the other four treatments, which were all similar.

For all salmonid smolts <180 mm (total catch <180 mm), separation efficiency was significantly higher with the 19-mm separation-bar spacing (75%, SE = 2.7) than with the other spacings (F = 7.75, df = 2, P = 0.001), and significantly higher (F = 5.12, df = 1, P = 0.028) with flow diverters in place (71%, SE = 2.1) than when they were not used (64%, SE = 2.1).

For all smolts 180 mm (total catch 180 mm), separation efficiency values for all three separation-bar spacing conditions were significantly different from each other (F = 23.12, df = 2, P = 0.000). Not surprisingly for this group, separation was higher using the 16-mm bar spacing (95%, SE = 1.9). Combined mean separation efficiency values for the total salmonid catch were 69% (SE = 1.9), 72% (SE = 2.0) and 77% (SE = 2.0) using separation bars spaced 16, 17, and 19 mm apart, respectively. Separation using the 19-mm bar spacing was significantly higher than for the 16-mm spacing, but not different from the 17-mm spacing. Summed across bar-spacing treatments, separation efficiency for the total catch was also higher (F = 6.72, df = 1, P = 0.012) with flow diverters on (75%, SE = 1.6) than when they were not used (69%, SE = 1.6).

During the summer migration, subyearling chinook salmon mean separation efficiency exhibited no interaction between flow-diverter and separation-bar-spacing conditions, and no difference between flow-diverter conditions. However, separation was significantly lower (F = 9.99, df = 2 P = 0.000) with the 16-mm separation-bar spacing (83%, SE = 1.2) than with either the 17-mm (90%, SE = 1.2) or 19-mm (89%, SE = 1.2) bar spacing.

Separator Exit Efficiency

Separator exit efficiency ranged from 85 to 98% for groups analyzed during the spring migration, and from 75 to 86% for subyearling chinook salmon during the summer migration. There was a significant interaction between separation-bar-spacing and flow-diverter conditions only for all smolts combined (total catch, all species) during the spring (F = 4.59, df = 2, P = 0.015), resulting in the following exit efficiency values:

Treatment conditions		Total salmonid species, total catch	
Separation-bar spacing	Flow diverter	Mean separator exit efficiency (%)	SE
16 mm	off	87.3	2.1
16 mm	on	93.8	2.1
17 mm	off	95.1	2.3
17 mm	on	94.1	2.1
19 mm	off	95.7	2.2
19 mm	on	89.4	2.2

Exit efficiency was lower for treatments using 16-mm bar spacing with no flow diverter than for all other treatments except those using 19-mm spacing with flow diverters deployed. The latter treatment had similar exit efficiency to both 17-mm treatments, and to the 16-mm treatments with flow diverters on, but was lower than the 19-mm bar spacing without flow diverters. A complete list of statistical comparisons for exit efficiency using the simulated conventional separator is contained in Appendix Table 4.

Subyearling chinook salmon generally exited the separator less readily than did salmonids during the spring migration. Mean exit efficiency was similar for flow diverter treatments when compared across separation-bar spacing conditions ($F = 0.33$, $df = 1$, $P = 0.566$), but was significantly different among separation-bar spacing conditions ($F = 5.32$, $df = 2$, $P = 0.007$). Fall chinook exit efficiency was higher using the 16-mm separation-bar spacing (88%, SE = 2.4) than the 19-mm spacing (75%, SE = 2.4). Both variations were statistically similar to exit efficiency using 17-mm bar spacing (80%, SE = 2.4).

Fish Condition

During the spring migration, mean descaling ranged from 0.9 to 5.9% for analyzed groups (Table 1). For all salmonids captured, (total catch), mean descaling using 16, 17, and 19-mm bar-spacing was 3.9, 4.1 and 4.0%, respectively. This was somewhat lower than the overall descaling rate of 6.8% posted for all species summarized from the juvenile fish facility annual report (Hoffarth et al. 1999).

Subyearling chinook salmon descaling was typically low throughout the summer migration, averaging 1.1, 1.2, and 1.2% using respective bar spacings of 16, 17, and 19 mm.

Differences among mean descaling values were compared using the ANCOVA and ANOVA procedures for the same groups analyzed for separation and exit efficiency. No interaction was found between flow diverter and separation-bar spacing conditions for any of the groups analyzed, and mean descaling differences among treatments were not significant (Appendix Table 5). Differences among sample date were significant for subyearling chinook salmon ($F = 29.17$, $df = 1$, $P = 0.000$), but did not explain variability among descaling data for groups during the spring migration.

Table 1. Mean descaling values (%) by species and separation-bar spacing condition for salmonid smolt groups evaluated using a simulated conventional wet separator during biological design criteria studies at McNary Dam, 1998.

Species	Length group	Separation-bar spacing (mm)	Mean	SE
Yearling chinook salmon	<180 mm	16	3.7	1.1
		17	4.4	1.1
		19	4.8	1.1
	total catch	16	3.8	1.1
		17	4.8	1.4
		19	4.8	1.1
Steelhead	180 mm	16	2.7	1.0
		17	4.5	1.4
		19	4.9	1.4
	total catch	16	2.4	1.0
		17	4.0	1.2
		19	3.8	1.2
Sockeye salmon	<180 mm	16	5.9	1.0
		17	3.5	1.0
		19	3.5	1.0
Total salmonid species (spring migration)	<180 mm	16	4.7	0.7
		17	3.8	0.7
		19	4.1	0.7
Total salmonid species (spring migration)	180 mm	16	0.9	1.3
		17	5.3	1.3
		19	4.9	1.6
Total salmonid species (spring migration)	total catch	16	3.9	0.7
		17	4.1	0.7
		19	4.0	0.7
Subyearling chinook salmon	<180 mm	16	1.1	0.3
		17	1.2	0.3
		19	1.2	0.3

OBJECTIVE 2: EVALUATE SEPARATION-BAR SPACING, WATER VELOCITY, AND SEPARATION-BAR ARRAY ORIENTATION IN A HIGH-VELOCITY FLUME WET SEPARATOR

Approach

The HVF wet separator constructed for preliminary evaluation in 1997 (McComas et al. 1998) was used during this series. The separator consists of an aluminum flume 76 cm (30 in) square in cross section with a working separation-bar length of 12 m (40 ft).

Individual separation bars were 25.4-mm-id (1-in-id) aluminum tubing. The 12-m array was consists of 8 removable, interconnecting panels, each 1.5-m long by 0.76-m wide (5 ft x 30 in). This configuration facilitated exchange among bar spacing and slope treatments. To evaluate the effect of separation-bar spacing on separation efficiency and separator exit efficiency, three sets of separation bars were fabricated with spacing of 13, 16, or 19 mm (0.5, 0.625, or 0.75 in) between bars.

Separation-bar panels were supported in the flume at one of two orientations by 2.54 cm (1 in) square aluminum stanchions. Stanchions were placed in pockets set into, and flush with, the inside of the HVF. With the bars at 0° (flat) in relation to the water surface, one set of stanchions maintained the bottom of the array approximately 36 cm (14 in) above the bottom of the flume along the entire array length. The other set of supports increased in length from 0 cm at the upstream end to 36 cm (14 in) at the downstream end, so that the array inclined at a constant positive slope.

For each combination of separation-bar spacing and angle, separation efficiency was evaluated at velocities of 1 and 2 m/s, measured near the downstream end of the separation bars. Flow control in the 12-m working section of the flume was accomplished by varying the height of a lift gate near the downstream end of the flume, and by regulating makeup water volume to a distribution box at the upstream end of the flume. Makeup water was supplied by forebay siphons.

Velocity was measured and adjusted for each replicate using a Swoffer Model 2100 current velocity meter (Swoffer Marine Instruments, Inc., Seattle, Washington[1]) and water depth was adjusted to approximately 5 cm (2 in) over the downstream end of the separation bars for all treatments.

---

1 Reference to trade names does not imply endorsement by National Marine Fisheries Service.

Twelve treatments involving combinations of separation-bar spacing, separation-bar array orientation and water velocity were organized in blocks to evaluate the effects of the three conditions on separation and exit efficiency and fish condition as follows:

Treatment	Separation-bar spacing (mm)	Condition Separation-bar orientation	Water velocity (m/s)
1	13	flat	1
2	13	angled	1
3	13	flat	2
4	13	angled	2
5	16	flat	1
6	16	angled	1
7	16	flat	2
8	16	angled	2
9	19	flat	1
10	19	angled	1
11	19	flat	2
12	19	angled	2

Replicates were randomized by separation-bar spacing, so that all treatments at a given spacing were completed before beginning treatments at the next bar spacing.

River-run migrant salmonid smolts (test fish) used during the evaluation were obtained by trapping volitional emigrants from the south orifice of Gatewell 6B. After establishing treatment conditions in the separator, a replicate was initiated by opening the gatewell orifice to introduce test fish into the upstream end of the HVF along with the partially dewatered gatewell-orifice flow. Smolts were allowed to accumulate in the flume and holding tanks until at least 25 chinook salmon had entered the unit. Recruitment from the gatewell was terminated by closing the gatewell orifice, and fish were removed from the unit in four groups (above bars, below bars, large-fish holding tank, small-fish holding tank), and examined similarly to fish for Objective 1.

Results and Discussion

A total of 10,130 smolts were included in high-velocity flume wet separator treatment comparisons for the spring migration. Yearling chinook salmon <180 mm, sockeye salmon <180 mm, and steelhead 180 mm comprised approximately 48, 25, and 13% of the total catch, respectively. For the summer migration period, nearly 99% of the total catch of 35,136

smolts were subyearling chinook salmon. Salmonid catch data for the HVF are presented by replicate in Appendix Table 6.

ANOVA, rather than the split-plot analysis, was used to determine the significance of differences among means for the treatments; this method was preferred for reasons analogous to those outlined in the discussion under Objective 1. Separation efficiency, separator exit efficiency, and descaling analyses were completed by length group for each species and for the total salmonid catch.

From the spring chinook migration period, sufficient numbers of smolts were available for analyses of each of the following categories: chinook salmon <180 mm, total chinook salmon catch, steelhead 180 mm, total steelhead catch, sockeye salmon <180 mm, total salmonid catch <180 mm, total salmonid catch 180 mm, and total salmonid catch. Subyearling chinook salmon <180 mm comprised the only group with sufficient numbers of valid replicates for analysis during the summer migration. Since virtually all sockeye and subyearling chinook salmon were <180 mm, a separate analysis was not done for total catch for these species.

A total of 99 replicates were completed over the spring migration. Low numbers of smolts exiting the south gatewell produced a mean replicate duration of 4.4 hours, and by 12 May it became apparent that fewer than the expected 10 replicates per treatment would be realized if all 12 treatments were replicated for the remainder of the season. All four 13-mm separation-bar spacing conditions were discontinued after 12 May in order to complete as many replicates as possible using what at that time appeared to be the more advantageous treatments. This resulted in 4 replicates for each of the 13-mm treatments, and 11 replicates completed for each treatment using 16- and 19-mm separation-bar spacing.

Separation Efficiency

Complete results of ANCOVA and ANOVA comparisons for separation efficiency are presented in Appendix Table 7 by species for each group analyzed.

At a given separation-bar spacing, mean separation efficiency for chinook salmon <180 mm was higher at a water velocity of 1 m/s than at 2 m/s, and generally higher using a separation-bar array orientated flat in relation to the water surface than using the angled orientation (Fig. 2a). Separation of yearling chinook salmon <180 mm was affected by significant interactions between bar spacing and array orientation ($F = 3.43$, $df = 2$, $P = 0.037$) and between bar spacing and water velocity ($F = 3.42$, $df = 2$, $P = 0.037$). For the former interaction, the highest mean separation efficiency was obtained using 19-mm bar spacing with a flat bar array (74%, SE = 3.41). However, this was statistically similar to separation

2a.

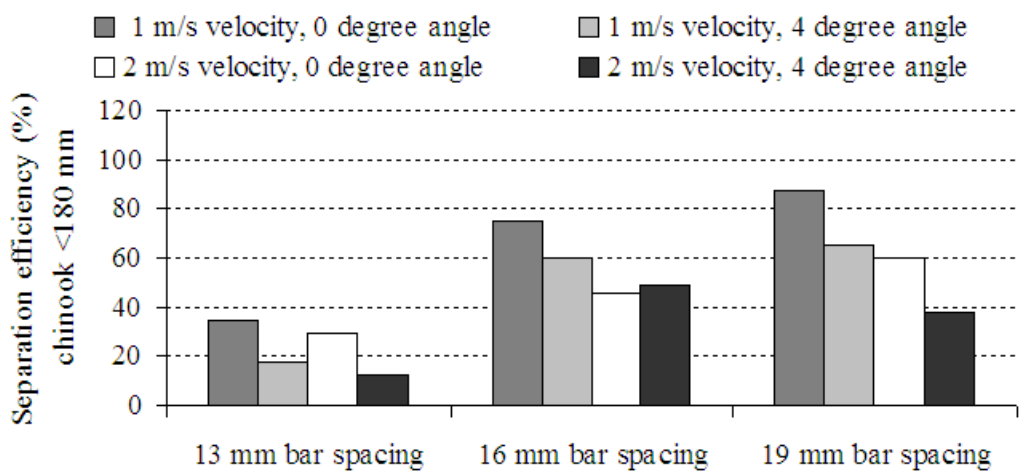

2b.

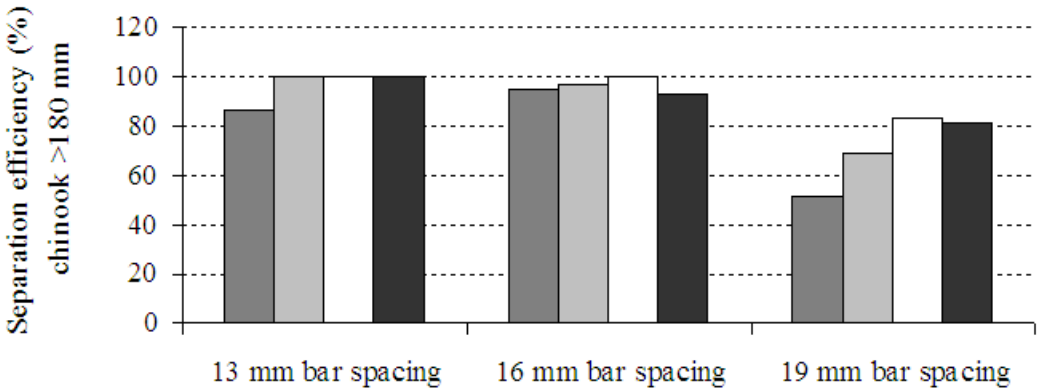

2c.

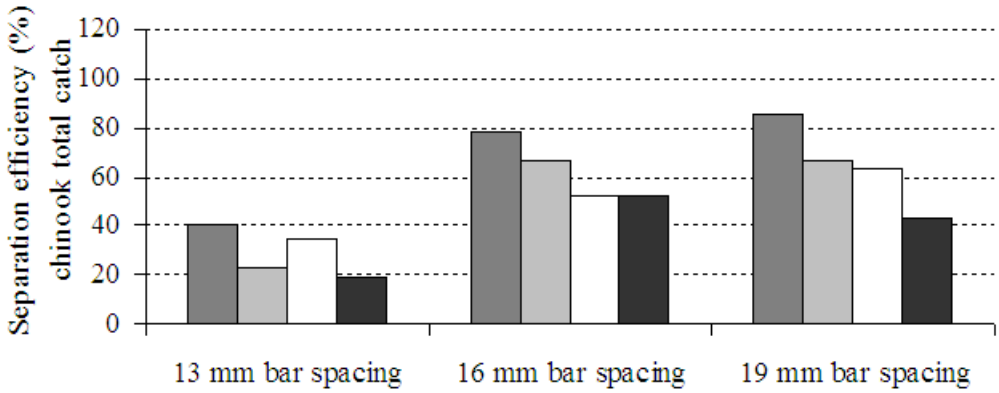

Figure 2. Relationship among mean separation efficiency values for yearling chinook salmon by treatment group for fish captured during separation efficiency evaluations using a high-velocity flume wet separator at McNary Dam, 27 April-6 June, 1998.

efficiency using 16-mm bar spacing with an angled bar array (55%, SE = 3.11) and to 16-mm spacing with a flat array (60%, SE = 3.0). Summed across angle conditions, mean separation efficiency for bar-spacing and velocity treatments was significantly higher using 19-mm spacing and a water velocity of 1 m/s (77%, SE = 3.14) than for any other combination.

The chinook salmon 180 mm group was not formally analyzed because too few replicates were completed with statistically valid numbers of fish. However, summed by treatment, this group showed a reverse trend to that noted for smaller fish (Fig. 2b). When fish 180 mm were included, the total yearling chinook salmon catch displayed a proclivity similar to that of the smaller chinook salmon group with respect to interaction between separation-bar spacing and array angle. Separation efficiency using 19-mm spacing and a flat array (74%, SE = 2.7) was higher than for all other bar-spacing/angle combinations (F = 3.63, df = 2, P = 0.030). Calculated across bar spacing and angle conditions, mean separation efficiency values for the total chinook salmon catch were significantly higher at 1 m/s (60%) than at 2 m/s (44%, F = 31.76, df = 1, P = 0.000) (Fig. 2c).

Steelhead <180 were captured too infrequently for analysis, and there were too few treatments with 13-mm bar spacing to demonstrate trends. However, at the 16- and 19-mm bar spacings, smaller steelhead mean separation efficiency values were at least arithmetically higher with the flat separation bar array, and were generally higher at 2 m/s than at 1 m/s with either array orientation (Fig. 3a).

As with smaller chinook salmon, separation efficiency results for steelhead 180 mm were influenced by a significant interaction between separation-bar spacing and array angle (F = 3.61, df = 2, P = 0.041). Since separation for larger fish is enhanced by not sounding between the bars, conditions which retard sounding favor better separation. Unsurprisingly then, the highest separation for this group occurred using 13-mm bar spacing with the angled bar array (100%, SE = 4.39, Fig. 4b).

Somewhat lower, but statistically similar, values were obtained using 13-mm bar spacing with the flat bar array (90%, SE = 4.4), and also using 16-mm bar spacing with flat (99%, SE = 2.2) and angled (96%, SE = 2.2) bar arrays. With 19-mm spacing, separation efficiency using the flat bar array (68%, SE = 2.2) was statistically lower than that using the angled array (76%, SE = 2.1), and both flat and angled bar treatments with 19-mm spacing were different from those with 13- and 16-mm spacing.

For the total steelhead catch, differences in separation efficiency were significant only for separation-bar spacing, possibly a result of the influence of including smaller steelhead (Fig. 3c). Mean separation efficiency was higher for all 16-mm bar spacing treatments combined (56%, SE = 4.8) than for all 13-mm (28%, SE = 9.8) or 19-mm (43%, SE = 4.8) treatments.

3a.

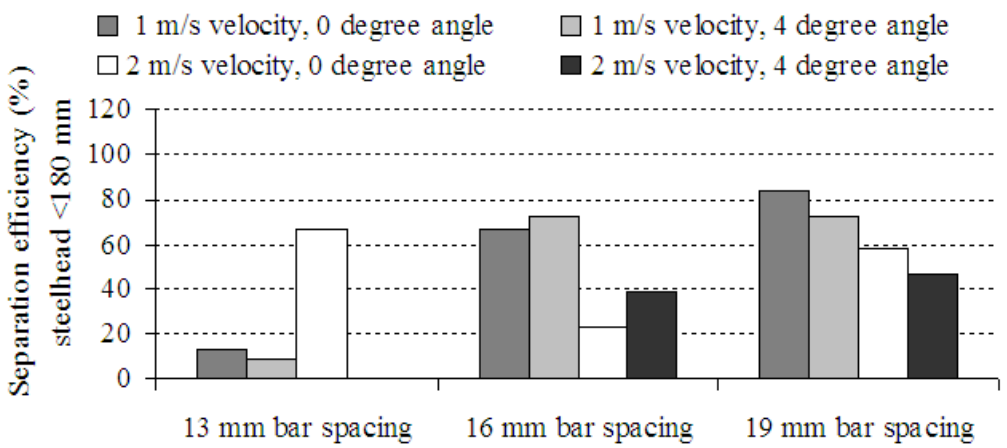

3b.

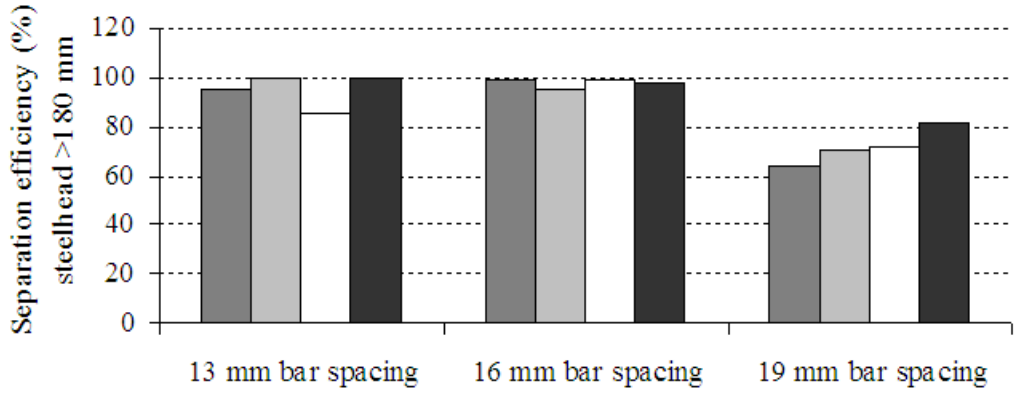

3c.

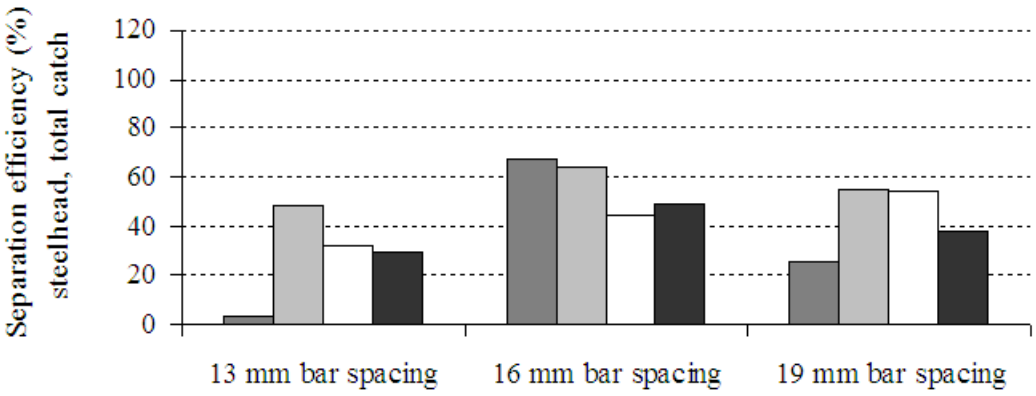

Figure 3. Relationship among mean separation efficiency values for steelhead by treatment group for fish captured during separation efficiency evaluations using a high-velocity flume wet separator at McNary Dam, 27 April-6 June, 1998.

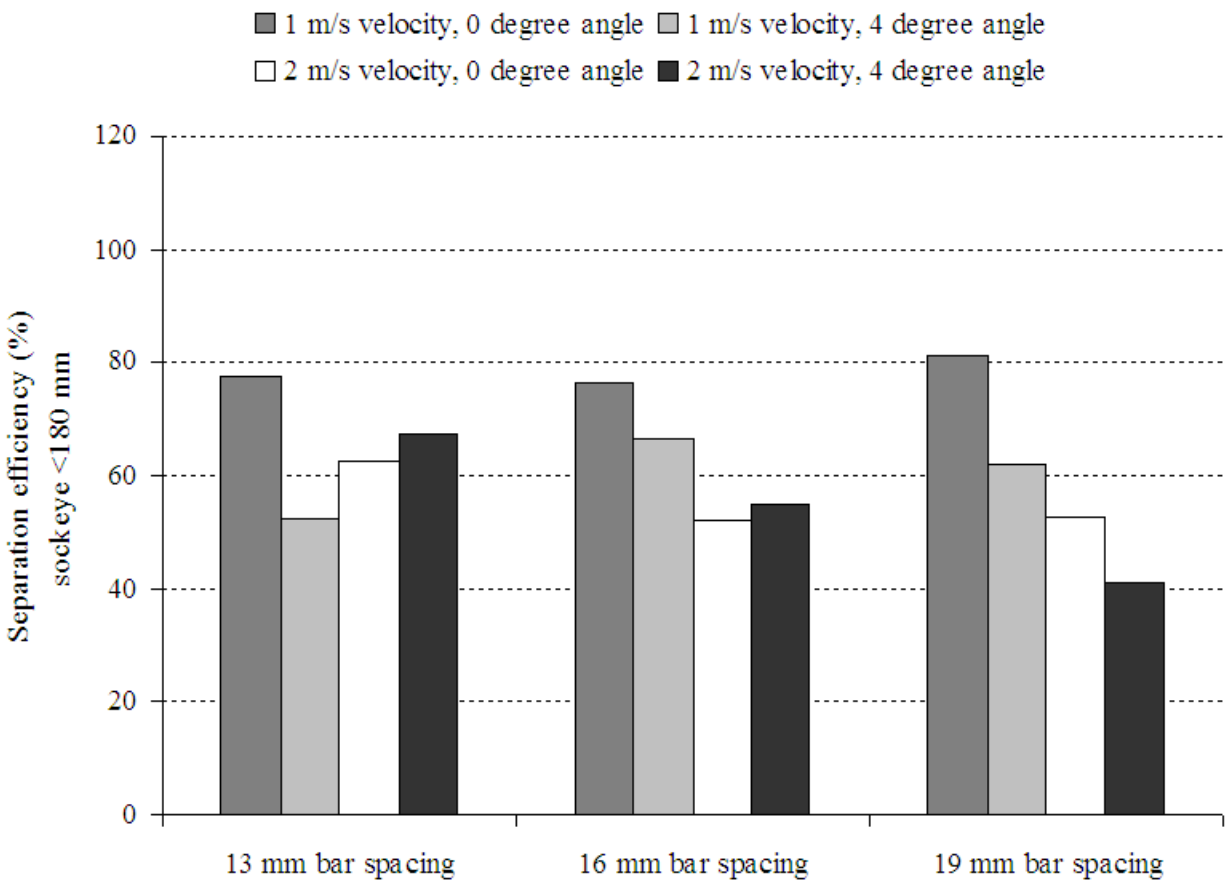

Figure 4. Relationship among mean separation efficiency values by length group for sockeye salmon <180 mm examined during separation efficiency evaluations using a high velocity flume wet separator at McNary Dam, 27 April-6 June 1998.

All but one sockeye salmon captured were <180 mm in length, so that only treatments involving the smaller sockeye salmon group were analyzed for this species (Fig. 4). Separation efficiency values for sockeye salmon were significantly different solely with regard to water velocity (F = 4.63, df = 1, P = 0.037). Combined over separation-bar spacing and array angle conditions, separation efficiency was higher at a water velocity of 1 m/s (69%, SE = 5.1) than 2 m/s (55%, SE = 4.4).

All salmonids captured (total salmonids) during spring were analyzed by length group in a manner parallel to analyses for individual species. Separation efficiency showed a significant interaction among the three conditions evaluated (separation-bar spacing, water velocity, and separation-bar array angle) for fish <180 mm (F = 3.99, df = 2, P = 0.022), and for the total catch (F = 3.69, df = 2, P = 0.029). For both fish groups, the highest values were obtained using flat separation-bar arrays and 1 m/s water velocity.

Also, there was a distinct trend within separation-bar spacing conditions for both groups; measured separation efficiency was higher at 1 m/s water velocity than at 2 m/s velocity, and higher with a flat separation-bar array than with an angled array (Fig. 5). The highest mean separation for fish <180 mm was achieved using the 19-mm spacing (84%, SE = 3.8) which was statistically similar only to the 16-mm separation-bar spacing (75%, SE = 3.8). Separation efficiency for the total catch was nearly identical using 16-mm and 19-mm bar spacing (80.88%, SE = 3.1 and 80.95%, SE = 3.3, respectively), and both estimates were significantly higher than values for all other treatments.

Separation efficiency for the total catch 180 mm was significantly correlated to separation-bar spacing (F = 26.79, df = 2, P = 0.000), with no interaction among treatment conditions. Mean separation using the 13-mm spacing (94%, SE = 5.4) was similar to that using the 16-mm spacing (95%, SE = 2.4), and both the 13- and 16-mm spacing conditions produced significantly higher separation efficiency than the 19-mm spacing (71%, SE = 2.3).

Differences between subyearling chinook salmon separation efficiency values were significant for water velocity (F = 30.40, df = 1, P = 0.000) and separation-bar array angle (F = 22.25, df = 1, P = 0.000). Separation efficiency was statistically higher at 1 m/s (81%, SE = 1.8) than at 2 m/s velocity (67%, SE = 1.8), and higher using the flat separation-bar array (80%, SE = 1.8) than the angled array (68%, SE = 1.8). Separation-bar spacing did not influence fall chinook salmon separation during this study. However, since the subyearling chinook salmon lengths (mean 105 mm, SE = 1.38, range 68-154 mm) over the course of the study were well below the 180-mm threshold, this outcome was not unexpected.

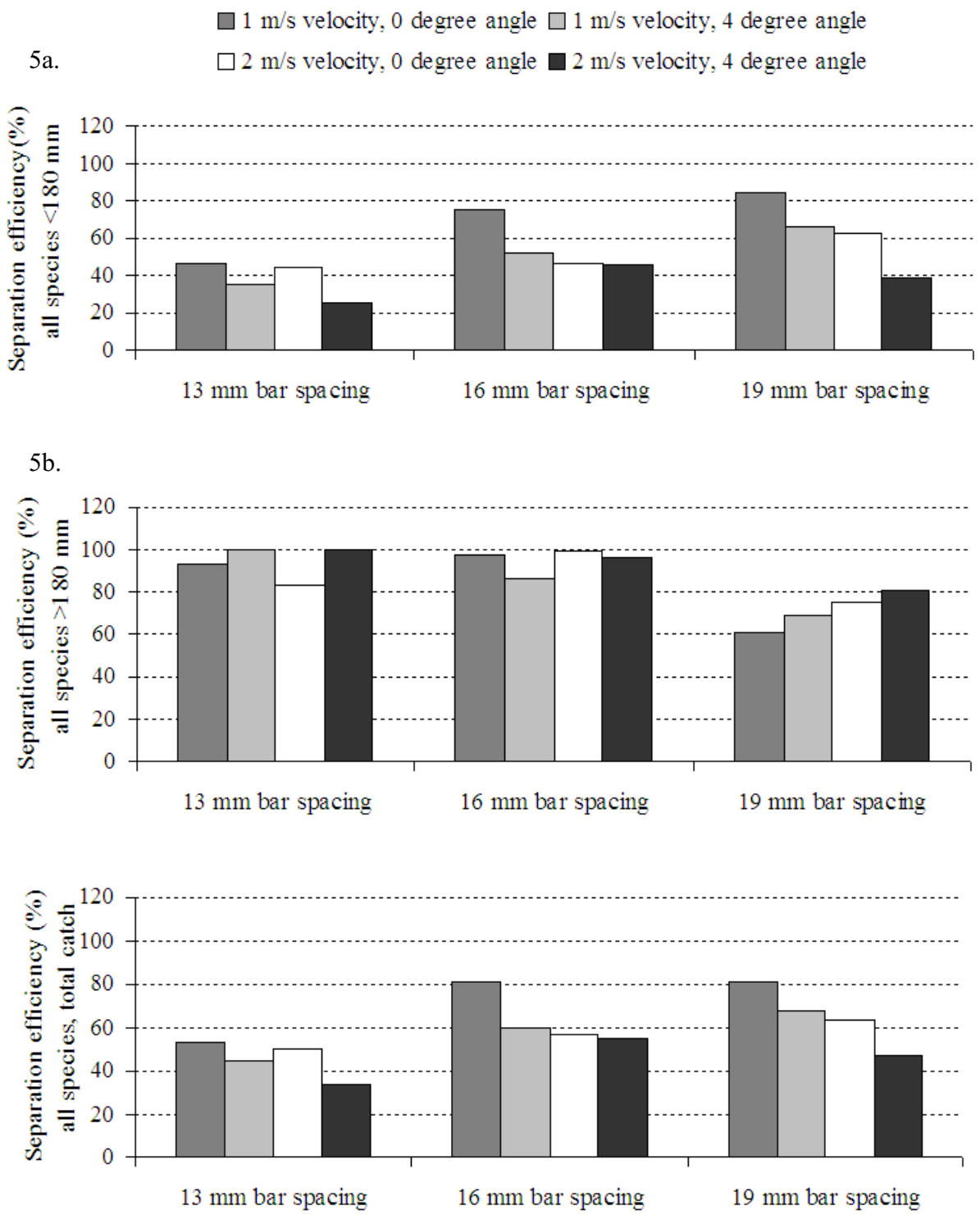

Figure 5. Relationship among mean separation efficiency values by treatment group for all salmonid species captured during separation efficiency evaluations using a high-velocity flume wet separator at McNary Dam, 27 April-6 June, 1998.

Sample date was included as a covariate in analyses of length groups for which sufficient numbers of replicates were available over the entire migration, and/or of groups for which combining adjacent replicates (through time) did not compromise the goal of the procedure. A significant portion of variability in mean separation efficiency was attributable to sample date for yearling chinook salmon <180 mm ($F = 26.73$, $df = 1$, $P = 0.000$), yearling chinook salmon total catch ($F = 24.44$, $df = 1$ $P = 0.000$), total salmonid species <180 mm ($F = 10.66$, $df = 1$, $P = 0.002$), and the total salmonid species total catch ($F = 4.06$, $df = 1$, $P = 0.047$).

Separator Exit Efficiency

Statistical analyses of separator exit efficiency data obtained using the HVF was conducted using the methods described in for separation efficiency in Objective I (Appendix Table 8).

Most exit-efficiency comparisons revealed some level of interaction between water velocity and separation-bar array angle. For example, the interaction between velocity and angle was significant for yearling chinook salmon <180 mm ($F = 24.20$, $df = 1$, $P = 0.000$), with the lowest exit efficiency value associated with 1 m/s velocity and angled bars (89%, SE = 0.996). Exit efficiency was similar among treatments using 1 m/s velocity with flat separation bar arrays (99.7%, SE = 1.0), and 2 m/s velocity with flat (99.7%, SE = 1.0) or angled arrays (99%, SE = 1.1). Results were nearly identical in magnitude and direction for the total yearling chinook salmon catch ($F = 4.55$, $df = 1$, $P = 0.043$), and for subyearling chinook salmon ($F = 18.20$, $df = 1$, $P = 0.000$), indicating that fish in the smaller size class were holding in the separator at the lower velocity, possibly using the angle of the separation bars as flow protection. At the higher velocity, or without an angled array for protection, fish exited the separator expeditiously.

Sockeye salmon <180 mm exit efficiency ranged from 97 to 100% over all 12 treatments, and showed a similar overall pattern. However, there was no interaction among conditions and no significant differences among mean values by treatment for this length group. Given the relatively high exit efficiencies and the poorer separation, it is probable that sockeye salmon were unable to sound quickly enough to make use of the array angle as flow protection, unable to hold for sustained periods in water velocities approaching 1 m/s even with the angled bars, or both.

Mean exit efficiency for large fish groups exhibited a similar trend with respect to interaction between velocity and bar angle for steelhead 180 mm ($F = 4.55$, $df = 1$ $P = 0.43$), and for the total salmonid catch 180 mm ($F = 5.67$, $df = 1$, $P = 0.023$), but in the large fish, disparity between efficiencies was greater within each group than for the smaller fish groups. Exit efficiency for steelhead 180 mm at 1 m/s velocity and with an angled separation bar array was 67% (SE = 4.7). This was significantly lower than exit

efficiency with a flat bar array at 1 m/s (97%, SE = 4.8), or with the flat or angled bar array at 2 m/s (99%, SE = 4.8 and 89.5%, SE = 4.98, respectively).

Results were nearly identical for all small smolts (180 mm), with respective means using angled and flat arrays of 72% (SE = 3.9) and 97% (SE = 4.0) at 1 m/s and 99% (SE = 3.97) and 93% (SE = 3.9) at 2 m/s water velocity. Intuitively, these results reinforced our observations that larger fish are more capable of maintaining position in the separator than smaller animals under similar conditions. It is noteworthy that all groups tended to exit promptly at either velocity when the separation-bar array was flat.

As with separation efficiency, separator exit efficiencies for the total catch <180 mm and for the total catch of all smolts combined were affected by interactions between separation-bar spacing, water velocity and separation-bar array angle. For the total catch <180 mm, exit efficiency was significantly lower using an angled separation-bar array at a velocity of 1 m/s in conjunction with 16-mm bar spacing (84%, SE = 1.2) than for all combinations except that using 19-mm spacing (86%, SE = 1.2), velocity at 2 m/s, and angled separation bars.

For all salmonid smolts evaluated during the spring migration (total catch), the combination of 16-mm bar spacing with an angled bar array and a velocity of 1 m/s produced significantly lower exit efficiency (81%, SE = 1.3) than all other treatment combinations. Exit efficiency was over 90% for all other treatments in both groups except for the total catch with 19-mm spacing, angled bars, and velocity of 1 m/s (88%, SE = 1.3). Among the three separation-bar spacings for both groups, exit efficiency was very similar (range 97.42 to 99.60%) at water velocities of 1 m/s and 2 m/s using flat separation-bar arrays.

Fish Condition

Results of descaling comparisons using the HVF are presented in Appendix Table 9. There was no significant interaction among treatment conditions and no significant differences among mean descaling values by treatment or condition for any fish group evaluated during the spring migration. Considered by separation-bar spacing, descaling ranged from 0.5 to 5.7% for all groups with sufficient replicate sizes for evaluation (Table 2). Greater variability in data for the 13-mm treatments probably resulted from the lower number of replicates and truncated duration over which replicates for that separation-bar spacing were conducted.

For subyearling chinook salmon, there was a significant difference between mean descaling values at water velocities of 2 m/s (3.4%, SE = 0.4) and 1 m/s (1.5%, SE = 0.4). This relationship is unexplained, and will be watched closely during future investigations.

Table 2. Mean descaling values (%) by species and separation-bar spacing condition for salmonid smolt groups evaluated using a high-velocity flume wet separator during biological design criteria studies at McNary Dam, 1998.

Species	Length group	Separation-bar spacing (mm)	Mean descaling (%)	SE
Yearling chinook salmon	<180 mm	13	5.6	1.2
		16	1.1	0.6
		19	2.9	0.7
	total catch	13	5.7	1.1
		16	4.1	0.6
		19	3.0	0.6
Steelhead	180 mm	13	0.7	1.7
		16	3.2	0.8
		19	3.0	0.8
	total catch	13	0.5	1.8
		16	3.2	0.8
		19	2.5	0.9
Sockeye salmon	<180 mm	13	2.6	1.8
		16	3.9	0.9
		19	2.7	0.9
Total salmonid species (spring migration)	<180 mm	13	4.7	0.9
		16	4.0	0.5
		19	3.2	0.5
Total salmonid species (spring migration)	180 mm	13	1.8	1.9
		16	3.7	0.8
		19	3.6	0.8
Total salmonid species (spring migration)	total catch	13	4.6	0.9
		16	3.8	0.5
		19	3.3	0.5
Subyearling chinook salmon	<180 mm	13	2.0	0.5
		16	2.7	0.5
		19	2.8	0.5

OBJECTIVE 3. EVALUATE A PROTOTYPE ADULT AND DEBRIS SEPARATOR

Approach

Several techniques were considered for removing trash from the water preceding entry into a wet separator, such as revolving screens, moving inclined plane collectors, and trash dump systems. Since this objective was appended just before the field season began, we implemented a relatively uncomplicated design directed toward removal of primarily larger debris and incidental catch. Also, since there was no duplicate or comparison system available for evaluation, the results were not formally analyzed.

An adult and debris (adult separator) separator was retrofit to the space between the simulated conventional wet separator used in Objective 1 and the gatewell dewatering unit upstream from the wet separator (Fig. 6). The adult separator unit was contained in a rectangular aluminum box 183 cm long and 61 cm wide (6 x 2 ft)(Fig. 6). The separation-bar array within the unit was made of 25.4-mm-id (1-in id) aluminum tubing spaced 32 mm (1.25 in) apart. This spacing allowed water and smolts to pass readily between the bars into a 76-mm (3-in) deep flume beneath, from which they were routed into the simulated conventional juvenile-fish wet separator.

The separation bars sloped downstream 25.4 mm (1 in) along their length. In addition, at the downstream end, the bars sloped 25.4 mm from left to right facing downstream. By this arrangement, adult salmonids and other large incidental fish which were unable to pass between the separation bars were guided toward the right downstream corner of the array as they slid along the separation bars. In addition to the compound slope on the separation bars, a curved, padded wall along the lower end of the unit helped guide intercepted fish toward an exit opening in the right side at the downstream end of the adult separator. The opening routed diverted animals into a flume leading to the juvenile fish bypass channel under the separator platform. A spray bar suspended over the lower end of the separator directed water along separation bars and into the return flume to prevent injury and to provide lubrication.

To determine the number of fish redirected by the adult separator (separated), an attendant counted and recorded, by species, all fish passing through the flume when the unit was operational. Non-separated fish were removed from the juvenile fish wet separator with a dipnet as they accumulated, counted by species, and returned to the bypass channel without delay.

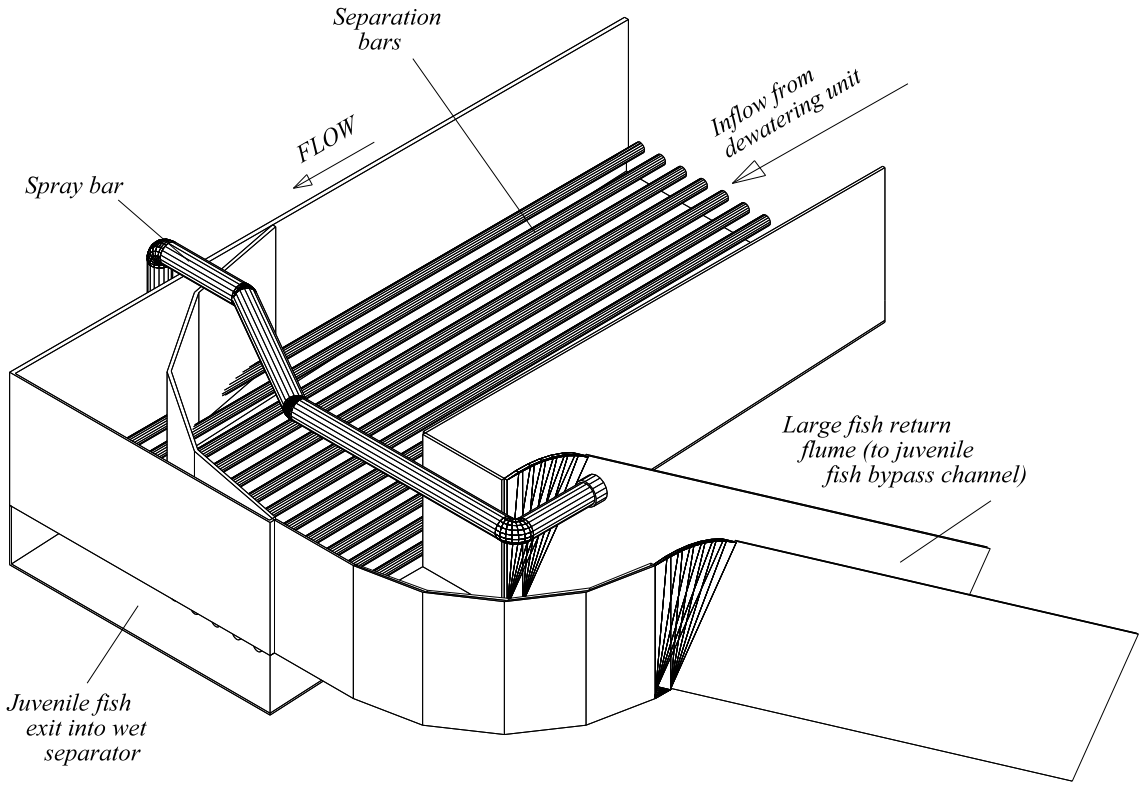

Figure 6. Major components of the adult and debris separator used to remove trash and large fish from flow carrying juvenile salmonid smolts during wet separator biological design criteria studies at McNary Dam, 1998.

Debris which did not pass between the bars (separated debris) accumulated on the adult separator separation bars and was removed manually. Trash which did pass between the bars was collected from the juvenile fish wet separator and holding tanks, and constituted the non-separated contingent.

Results and Discussion

A total of 34 large fish were counted passing through the adult return flume, or were removed from the juvenile wet separator over both the spring and summer migrations. Of these, 1 was an adult steelhead, 29 were adult shad (*Alosa sapidissima*), and four were suckers (*Catostomus* spp.). Twenty nine of the total number (85%) were counted passing through the adult separator return flume. This should be considered the minimum separation efficiency for the unit, since it is possible that some individuals may have escaped visual detection. During all replicates conducted involving juvenile outmigrant salmonids, only one large steelhead smolt was known to have been intercepted and diverted by the adult separator.

The five large fish removed from the juvenile separator were all adult shad. We theorize that the laterally compressed shape of this species allowed some fish to pass between the separation bars when body alignment entering from the dewaterer was favorable.

Debris was retained over one week intervals periodically through the spring migration for comparison. Lacking a quantitative method of classification, comparison of separated and non-separated debris was subjective. The separated fraction (retained on the adult separator) was comprised mainly of larger woody debris, such as twigs and branches (Fig. 7a), while the non-separated fraction was composed largely of smaller wood chips, leaves, grasses, and aquatic plant parts (Fig. 7b). The adult separator was somewhat effective at filtering out larger debris, provided the pieces were either wider in cross section than the bar spacing, dendritic, or not oriented along the longitudinal axis of the separator bars on entering the unit.

The practicality of the adult separator as a debris removal device is dependent on application. For use in a HVF separator, smaller particles would normally pass through the wet separator (between the separation bars of the wet separator and through the submerged orifice, or over the overflow orifice), finally ending up in fish holding facilities. With a simulated conventional separator, the energy moving even small trash fragments dissipates on entering the unit, allowing the particles to accumulate on the perforated plate false bottom under the separation bars near the upstream end of the separator. Sufficiently large deposits of debris in this area could cause unpredictable flow disruption, altering effective function of the unit.

7a.

7b.

Figure 7. Debris recovered from an adult and debris separator (7a) and from a simulated conventional wet separator (7b) while evaluating the adult and debris removal unit during biological design criteria studies at McNary Dam, 1998.

CONCLUSIONS AND RECOMMENDATIONS

Conventional Wet Separator

1. Using a simulated conventional wet separator, separation efficiency for the total salmonid catch during the spring migration was highest with a 19-mm separation-bar spacing condition, or with flow diverters deployed. Subyearling chinook salmon separation efficiency was highest using 19- and 17-mm separation-bar spacing. Sockeye salmon <180 mm was the only group which displayed a significant interaction between flow diverter and separation-bar spacing conditions.

2. Separator exit efficiency for the total salmonid catch during the spring revealed a significant interaction between flow diverter and separation-bar spacing. Exit efficiency was highest using 19-mm bar spacing without flow diverters. Subyearling chinook salmon exit efficiency was highest using a 16-mm separation-bar spacing, but not different between flow diverter conditions.

3. There were no statistically significant differences in mean descaling values for any group analyzed from evaluations using the simulated conventional wet separator.

4. Using a conventional wet separator, total salmonid catch separation efficiency was statistically similar between 17- and 19-mm separation-bar spacing conditions. Future separation efficiency studies should include additional comparison to define the distinction in separation efficiency between these separation-bar gaps.

High-Velocity Flume Wet Separator

5. There was a significant interaction among separation-bar spacing, separation-bar-array angle and water velocity for the total salmonid catch during the spring migration using a high-velocity flume (HVF) wet separator. Separation efficiency was highest using 16-mm or 19-mm bar spacing, a 0° (flat) separation-bar array, and water velocity of 1 m/s. Fall chinook salmon separation efficiency showed no interaction among conditions, and was higher at 1 m/s water velocity, or using a flat separation-bar array.

6. Separator exit efficiency using the HVF displayed a significant interaction between water velocity and orientation of the separation-bar array for all groups except sockeye salmon <180 mm. For the total salmonid catch during the spring

migration, exit efficiency was generally higher using flat separation-bar arrays regardless of water velocity, and higher at 2 m/s water velocity than at 1 m/s.

7. No significant differences were found among mean descaling values for groups analyzed from the spring migration using the HVF. Subyearling chinook salmon descaling was significantly higher for treatments having 2 m/s water velocity than at 1 m/s.

8. Using the HVF, separation efficiency for the total salmonid catch was similar between replicates tested with the 16- and 19-mm separation bar gaps. Additional work should focus on determining the separation-bar spacing within this range to determine optimal bar spacing that allows passage of small fish while restricting large fish to the area above the bars.

9. To date, separation efficiency evaluations have been short in duration, with replicate tests lasting from approximately 30 minutes to 8 hours. However, since separators in operation at the dams function continuously, the relationship between diel time span and separation efficiency needs to be explored.

Adult and Debris Separator

10. A preliminary adult and debris separator design was at least 85% effective at intercepting and removing large fish prior to entry to a juvenile wet separator. For debris, the adult separator was somewhat effective at intercepting larger debris, but was ineffective at removing smaller particles from the water.

ACKNOWLEDGMENTS

We express our appreciation to our seasonal employees for their interest and efforts in this project. We extend special thanks to Ms. Rebecca Kalamasz of the Walla Walla District COE, and at McNary Dam, to Mr. David Coleman, Mr. William Prewitt, and the rigging crew for their invaluable support and cooperation. We also extend special thanks to our support staff, especially Mr. Ira Brickey and Mr. Wayne Henry for their efforts and insight during this study.

REFERENCES

Ceballos, J. R., S. W. Pettit, and J. L. McKern. 1992. Fish Transportation Oversight Team. annual report--1991. Transportation operations on the Columbia and Snake Rivers. U.S. Dep. Commer. NOAA Tech. Memo. NMFS F/NWR-29, 77 p.

Congleton, J. L., W. J. LaVoie, C. B. Schreck, L. E. Davis, H. Lorz, M. Beck, D. G. Elliot, R. J. Pascho, D. M. Chase, C. L. McKibbin, and L. J. Applegate. In press. Evaluation of procedures for collection, bypass, and downstream passage of outmigrating salmonids, annual report 1995. Report to U.S. Army Corps of Engineers, Walla Walla District, Walla Walla, Washington.

Gessel, M. H., W. E. Farr, and C. W. Long. 1985. Underwater separation of juvenile salmonids by size. Mar. Fish. Rev. 47(3):38-42.

Hoffarth, P., R. Tudor, L. Spencer, B. Eby, and R. Johnson. 1999. 1998 juvenile fish collection and bypass report for the McNary Dam Juvenile Fish Facility. Report to U.S. Army Corps of Engineers, Walla Walla District, Walla Walla, Washington.

McCabe, G. T., Jr., C. W. Long, and D. L. Park. 1979. Barge transportation of juvenile salmonids on the Columbia and Snake Rivers, 1977. Mar. Fish. Rev. 41(7):28-34.

McComas, R. L., B. P. Sandford, and D. B. Dey. 1997. Descaling and orifice passage efficiency studies at McNary Dam, 1995. Report to U.S. Army Corps of Engineers, Contract DACW68-84-H-0034, 20 p. plus appendices. (Available from Northwest Fisheries Science Center, 2725 Montlake Blvd. E., Seattle, WA 98112-2097.)

McComas, R. L., M. H. Gessel, B. P. Sandford, and D. B. Dey. 1998. Studies to establish biological design criteria for wet separators, 1996. Report to U.S. Army Corps of Engineers, Delivery order E86910060, 24 p. plus appendices. (Available from Northwest Fisheries Science Center, 2725 Montlake Blvd. E., Seattle, WA 98112-2097.)

Peterson, R.G. 1985. Design and analysis of experiments. Marcel Dekker, New York. 429 p.

Schreck, C. B., L. E. Davis, L. Burtis, P. A. Wood, J. Congleton, T. Mosey, S. Rocklage, and B. Sun. In prep. Evaluation of facilities for collection, bypass and transportation of outmigrating chinook salmon, Annual Report 1994. Report to U.S. Army Corps of Engineers, Walla Walla District, Walla Walla, Washington.

APPENDIX

Data Tables

Appendix Table 1. Total catch, by species and length group (by fork length in millimeters) for individual replicates of separation efficiency tests using a simulated conventional wet separator at McNary Dam, 1998.

	Subyearling chinook		Yearling chinook		Steelhead		Coho		Sockeye	
Source	<180	180	<180	180	<180	180	<180	180	<180	180
Replicate 1, Treatment 1, 27 April, Bar spacing 16 mm, flow diverters on										
Tanks: separated			33						1	
non-separated			30		15			7	1	
Separator: separated			11		1					
non-separated										
Replicate 2, Treatment 1, 30 April, Bar spacing 16 mm, flow diverters on										
Tanks: separated		27	1			2				12
non-separated		30	3			15				2
Separator: separated		2								1
non-separated										
Replicate 3, Treatment 1, 5 May, Bar spacing 16 mm, flow diverters on										
Tanks: separated		75	2		22				27	
non-separated		21	3			13				5
Separator: separated			4							
non-separated		2								
Replicate 4, Treatment 1, 7 May, Bar spacing 16 mm, flow diverters on										
Tanks: separated			6			1	31			
non-separated			9		5	3	45			
Separator: separated	4									
non-separated										
Replicate 5, Treatment 1, 11 May, Bar spacing 16 mm, flow diverters on										
Tanks: separated			23							34
non-separated			9		5		2			3
Separator: separated			1							
non-separated										
Replicate 6, Treatment 1, 12 May, Bar spacing 16 mm, flow diverters on										
Tanks: separated			17				2			10
non-separated			14			2	51			4
Separator: separated			5				1			
non-separated										
Replicate 7, Treatment 1, 14 May, Bar spacing 16 mm, flow diverters on										
Tanks: separated			32			6				68
non-separated			27		3	9	55			20
Separator: separated			14							1
non-separated			1			1	1			

Appendix Table 1. Continued.

Source	Subyearling chinook <180	Subyearling chinook 180	Yearling chinook <180	Yearling chinook 180	Steelhead <180	Steelhead 180	Coho <180	Coho 180	Sockeye <180	Sockeye 180
Replicate 8, Treatment 1, 19 May, Bar spacing 16 mm, flow diverters on										
Tanks: separated			22			1		1		3
non-separated			29		1	3	8	2		10
Separator: separated			10			1	1			
non-separated										
Replicate 9, Treatment 1, 21 May, Bar spacing 16 mm, flow diverters on										
Tanks: separated	9		31			1		5		64
non-separated	2		47		8	4	34	11		31
Separator: separated			20			2		1		2
non-separated										
Replicate 10, Treatment 1, 27 May, Bar spacing 16 mm, flow diverters on										
Tanks: separated	24		7		1	2	2	2		19
non-separated	9		16		8	1	10	4		7
Separator: separated	2		1					1		2
non-separated										
Replicate 11, Treatment 6, 23 June, Bar spacing 16 mm, flow diverters on										
Tanks: separated		189								
non-separated		37								
Separator: separated		12								
non-separated										
Replicate 12, Treatment 6, 26 June, Bar spacing 16 mm, flow diverters on										
Tanks: separated		160								
non-separated		32								
Separator: separated		16								
non-separated										
Replicate 13, Treatment 6, 26 June, Bar spacing 16 mm, flow diverters on										
Tanks: separated	45									
non-separated	23									
Separator: separated										
non-separated										
Replicate 14, Treatment 6, 29 June, Bar spacing 16 mm, flow diverters on										
Tanks: separated	59									
non-separated	14									
Separator: separated	5									
non-separated										
Replicate 15, Treatment 6, 30 June, Bar spacing 16 mm, flow diverters on										
Tanks: separated	134									
non-separated	56									
Separator: separated	34									
non-separated										

Appendix Table 1. Continued.

	Subyearling chinook		Yearling chinook		Steelhead		Coho		Sockeye	
Source	<180	180	<180	180	<180	180	<180	180	<180	180
Replicate 16, Treatment 6, 1 July, Bar spacing 16 mm, flow diverters on										
Tanks: separated	56									
non-separated	14									
Separator: separated	11									
non-separated										
Replicate 17, Treatment 6, 2 July, Bar spacing 16 mm, flow diverters on										
Tanks: separated	161									
non-separated	35									
Separator: separated	31									
non-separated										
Replicate 18, Treatment 6, 7 July, Bar spacing 16 mm, flow diverters on										
Tanks: separated	68									
non-separated	9									
Separator: separated	29									
non-separated										
Replicate 19, Treatment 6, 9 July, Bar spacing 16 mm, flow diverters on										
Tanks: separated	133									
non-separated	9									
Separator: separated	58									
non-separated										
Replicate 20, Treatment 6, 9 July, Bar spacing 16 mm, flow diverters on										
Tanks: separated	141									
non-separated	10									
Separator: separated	106									
non-separated										
Replicate 21, Treatment 6, 13 July, Bar spacing 16 mm, flow diverters on										
Tanks: separated	37									
non-separated	14		1							
Separator: separated	23		1							
non-separated										
Replicate 22, Treatment 6, 22 July, Bar spacing 16 mm, flow diverters on										
Tanks: separated	65		1							
non-separated	8		1							
Separator: separated	56									
non-separated										
Replicate 23, Treatment 6, 15 July, Bar spacing 16 mm, flow diverters on										
Tanks: separated	92									
non-separated	34									
Separator: separated	22									
non-separated										

Appendix Table 1. Continued.

	Subyearling chinook		Yearling chinook		Steelhead		Coho		Sockeye	
Source	<180	180	<180	180	<180	180	<180	180	<180	180
Replicate 24, Treatment 6, 17 July, Bar spacing 16 mm, flow diverters on										
Tanks: separated	114									
non-separated	19									
Separator: separated	28									
non-separated										
Replicate 25, Treatment 23 July, Bar spacing 16 mm, flow diverters on										
Tanks: separated	47									
non-separated	14									
Separator: separated										
non-separated										
Replicate 1, Treatment 2, 27 April, Bar spacing 16 mm, flow diverters off										
Tanks: separated			5			3	3			2
non-separated			5				12			
Separator: separated			9							1
non-separated										
Replicate 2, Treatment 2, 30 April, Bar spacing 16 mm, flow diverters off										
Tanks: separated			6							5
non-separated			11		5		1			3
Separator: separated			11							1
non-separated										
Replicate 3, Treatment 2, 6 May, Bar spacing 16 mm, flow diverters off										
Tanks: separated										26
non-separated			8		2		12	1		11
Separator: separated			1			1				8
non-separated										
Replicate 4, Treatment 2, 7 May, Bar spacing 16 mm, flow diverters off										
Tanks: separated			9			1				42
non-separated			7			2	7			34
Separator: separated			1							9
non-separated										
Replicate 5, Treatment 2, 11 May, Bar spacing 16 mm, flow diverters off										
Tanks: separated			11							27
non-separated			16			3	24			28
Separator: separated			15							
non-separated							1			
Replicate 6, Treatment 2, 12 May, Bar spacing 16 mm, flow diverters off										
Tanks: separated			14			2	2			8
non-separated			19		6	4	37			8
Separator: separated			5							
non-separated							1			

Appendix Table 1. Continued.

	Subyearling chinook		Yearling chinook		Steelhead		Coho		Sockeye	
Source	<180	180	<180	180	<180	180	<180	180	<180	180
Replicate 7, Treatment 2, 15 May, Bar spacing 16 mm, flow diverters off										
Tanks: separated			9							56
non-separated			29		4					9
Separator: separated			7							5
non-separated							8			
Replicate 8, Treatment 2, 18 May, Bar spacing 16 mm, flow diverters off										
Tanks: separated			50			1	2			25
non-separated			35		8	8	46			2
Separator: separated										
non-separated										
Replicate 9, Treatment 2, 21 May, Bar spacing 16 mm, flow diverters off										
Tanks: separated	2		24				2			40
non-separated			39		3	1	3	6		22
Separator: separated			20							8
non-separated										
Replicate 10, Treatment 2, 28 May, Bar spacing 16 mm, flow diverters off										
Tanks: separated	13		8			1	1	1		22
non-separated	4		12		7	4	24	14		22
Separator: separated	3									1
non-separated							1			
Replicate 11, Treatment 2, 23 June, Bar spacing 16 mm, flow diverters off										
Tanks: separated	197									
non-separated	67									
Separator: separated	10									
non-separated										
Replicate 12, Treatment 2, 24 June, Bar spacing 16 mm, flow diverters off										
Tanks: separated	155									
non-separated	49									
Separator: separated	1									
non-separated										
Replicate 13, Treatment 2, 26 June, Bar spacing 16 mm, flow diverters off										
Tanks: separated	60									
non-separated	15									
Separator: separated	1									
non-separated										
Replicate 14, Treatment 2, 29 June, Bar spacing 16 mm, flow diverters off										
Tanks: separated	70									
non-separated	23									
Separator: separated	9									
non-separated										

Appendix Table 1. Continued.

	Subyearling chinook		Yearling chinook		Steelhead		Coho		Sockeye	
Source	<180	180	<180	180	<180	180	<180	180	<180	180
Replicate 15, Treatment 2, 30 June, Bar spacing 16 mm, flow diverters off										
Tanks: separated	106									
non-separated	55									
Separator: separated										
non-separated										
Replicate 16, Treatment 2, 1 July, Bar spacing 16 mm, flow diverters off										
Tanks: separated	219									
non-separated	64									
Separator: separated	1									
non-separated										
Replicate 17, Treatment 2, 2 July, Bar spacing 16 mm, flow diverters off										
Tanks: separated	285		1							
non-separated	117									
Separator: separated	21									
non-separated										
Replicate 18, Treatment 2, 7 July, Bar spacing 16 mm, flow diverters off										
Tanks: separated	25,413									
non-separated										
Separator: separated	14									
non-separated	4									
Replicate 19, Treatment 2, 8 July, Bar spacing 16 mm, flow diverters off										
Tanks: separated	136									
non-separated	12									
Separator: separated	109									
non-separated										
Replicate 20, Treatment 2, `0 July, Bar spacing 16 mm, flow diverters off										
Tanks: separated	128	1								
non-separated	20	2								
Separator: separated	90									
non-separated										
Replicate 21, Treatment 2, 13 July, Bar spacing 16 mm, flow diverters off										
Tanks: separated	56		1							
non-separated	8									
Separator: separated	24									
non-separated	1									
Replicate 22, Treatment 2, 13 July, Bar spacing 16 mm, flow diverters off										
Tanks: separated	269									
non-separated	6									
Separator: separated										
non-separated	13									

Appendix Table 1. Continued.

	Subyearling chinook		Yearling chinook		Steelhead		Coho		Sockeye	
Source	<180	180	<180	180	<180	180	<180	180	<180	180
Replicate 23, Treatment 2, 14 July, Bar spacing 16 mm, flow diverters off										
Tanks: separated	281									
non-separated	4									
Separator: separated	61									
non-separated	14									
Replicate 24, Treatment 2, 20 July, Bar spacing 16 mm, flow diverters off										
Tanks: separated	43									
non-separated	17									
Separator: separated										
non-separated										
Replicate 25, Treatment 2, 23 July, Bar spacing 16 mm, flow diverters off										
Tanks: separated	43									
non-separated	13									
Separator: separated	3									
non-separated										
Replicate 1, Treatment 3, 28 April, Bar spacing 17 mm, flow diverters on										
Tanks: separated			74		6		1			
non-separated			56		40		9			
Separator: separated										
non-separated			1							
Replicate 2, Treatment 3, 1 May, Bar spacing 17 mm, flow diverters on										
Tanks: separated			46		2					4
non-separated			3		5		4			1
Separator: separated						1				
non-separated										
Replicate 3, Treatment 3, 6 May, Bar spacing 17 mm, flow diverters on										
Tanks: separated			21			2	7			28
non-separated			12		5		21			22
Separator: separated			8							2
non-separated							1			
Replicate 4, Treatment 3, 8 May, Bar spacing 17 mm, flow diverters on										
Tanks: separated			7			2				41
non-separated			2		1	2	7			24
Separator: separated			2				1			4
non-separated										
Replicate 5, Treatment 3, 5 May, Bar spacing 17 mm, flow diverters on										
Tanks: separated			7				1			14
non-separated			7		1	1	30			3
Separator: separated			2				1			
non-separated										

Appendix Table 1. Continued.

	Subyearling chinook		Yearling chinook		Steelhead		Coho		Sockeye	
Source	<180	180	<180	180	<180	180	<180	180	<180	180
Replicate 6, Treatment 3, 13 May, Bar spacing 17 mm, flow diverters on										
Tanks: separated			19			3	5			44
non-separated			17		2	2	29			11
Separator: separated			4			2				
non-separated							1			
Replicate 7, Treatment 3, 18 May, Bar spacing 17 mm, flow diverters on										
Tanks: separated			17							111
non-separated	1		20		2		9	11		29
Separator: separated			13			1				17
non-separated										
Replicate 8, Treatment 3, 19 May, Bar spacing 17 mm, flow diverters on										
Tanks: separated			19							18
non-separated			6			2	6			1
Separator: separated			1							4
non-separated										
Replicate 9, Treatment 3, 25 May, Bar spacing 17 mm, flow diverters on										
Tanks: separated	7		15		1		2	3		20
non-separated	1		14		9		30	10		20
Separator: separated			1							4
non-separated										
Replicate 10, Treatment 3, 1 June, Bar spacing 17 mm, flow diverters on										
Tanks: separated	55		8				2	1		5
non-separated	22		4		2		3	7	1	20
Separator: separated			1							
non-separated					1					
Replicate 11, Treatment 3, 23 June, Bar spacing 17 mm, flow diverters on										
Tanks: separated	213		1							
non-separated	24				1					
Separator: separated	1									
non-separated										
Replicate 12, Treatment 3, 25 June, Bar spacing 17 mm, flow diverters on										
Tanks: separated	190									
non-separated	30									
Separator: separated	20									
non-separated										
Replicate 13, Treatment 3, 26 June, Bar spacing 17 mm, flow diverters on										
Tanks: separated	54									
non-separated	15									
Separator: separated										
non-separated										

Appendix Table 1. Continued.

	Subyearling chinook		Yearling chinook		Steelhead		Coho		Sockeye	
Source	<180	180	<180	180	<180	180	<180	180	<180	180
Replicate 14, Treatment 3, 29 June, Bar spacing 17 mm, flow diverters on										
Tanks: separated	171									
non-separated	29									
Separator: separated	13									
non-separated										
Replicate 15, Treatment 3, 30 June, Bar spacing 17 mm, flow diverters on										
Tanks: separated	72									
non-separated	24									
Separator: separated	9									
non-separated										
Replicate 16, Treatment 3, 2 July, Bar spacing 17 mm, flow diverters on										
Tanks: separated	71									
non-separated	4		1							
Separator: separated	11									
non-separated										
Replicate 17, Treatment 3, 7 July, Bar spacing 17 mm, flow diverters on										
Tanks: separated	128									
non-separated	22									
Separator: separated	80									
non-separated										
Replicate 18, Treatment 3, 8 July, Bar spacing 17 mm, flow diverters on										
Tanks: separated	151									
non-separated	27									
Separator: separated	79									
non-separated										
Replicate 19, Treatment 3, 9 July, Bar spacing 17 mm, flow diverters on										
Tanks: separated	125		3							
non-separated	13									
Separator: separated	60									
non-separated										
Replicate 20, Treatment 3, 10 July, Bar spacing 17 mm, flow diverters on										
Tanks: separated	92		1							
non-separated	9		1							
Separator: separated	59									
non-separated										
Replicate 21, Treatment 3, 13 July, Bar spacing 17 mm, flow diverters on										
Tanks: separated	43									
non-separated	8									
Separator: separated	36									
non-separated										

Appendix Table 1. Continued.

	Subyearling chinook		Yearling chinook		Steelhead		Coho		Sockeye	
Source	<180	180	<180	180	<180	180	<180	180	<180	180
Replicate 22, Treatment 3, 14 July, Bar spacing 17 mm, flow diverters on										
Tanks: separated	86									
non-separated	6		1							
Separator: separated	48		1							
non-separated										
Replicate 23, Treatment 3, 15 July, Bar spacing 17 mm, flow diverters on										
Tanks: separated	58									
non-separated	12									
Separator: separated	17									
non-separated										
Replicate 24, Treatment 3, 21 July, Bar spacing 17 mm, flow diverters on										
Tanks: separated	54									
non-separated	9									
Separator: separated	29									
non-separated										
Replicate 25, Treatment 3, 24 July, Bar spacing 17 mm, flow diverters on										
Tanks: separated	48									
non-separated	16									
Separator: separated	22									
non-separated										
Replicate 1, Treatment 4, 27 April, Bar spacing 17 mm, flow diverters off										
Tanks: separated			74		2	2				
non-separated			27		11	3	8			
Separator: separated			1							
non-separated			4		5					
Replicate 2, Treatment 4, 1 May, Bar spacing 17 mm, flow diverters off										
Tanks: separated			36			1	1			11
non-separated			19			3	12			2
Separator: separated			3							
non-separated			2							
Replicate 3, Treatment 4, 6 May, Bar spacing 17 mm, flow diverters off										
Tanks: separated			7							59
non-separated			6		1		2			
Separator: separated			9							33
non-separated										18
Replicate 4, Treatment 4, 8 May, Bar spacing 17 mm, flow diverters off										
Tanks: separated			3		1					53
non-separated			9		3		3	2		20
Separator: separated										
non-separated										

Appendix Table 1. Continued.

	Subyearling chinook		Yearling chinook		Steelhead		Coho		Sockeye	
Source	<180	180	<180	180	<180	180	<180	180	<180	180
Replicate 5, Treatment 4, 12 May, Bar spacing 17 mm, flow diverters off										
Tanks: separated			5			2	1			44
non-separated			4				3	2		8
Separator: separated			2							4
non-separated										
Replicate 6, Treatment 4, 13 May, Bar spacing 17 mm, flow diverters off										
Tanks: separated			8				2	1		6
non-separated			1		6		16	2		4
Separator: separated			2		1		1			
non-separated										
Replicate 7, Treatment 4, 15 May, Bar spacing 17 mm, flow diverters off										
Tanks: separated			43		1	2	2			27
non-separated			36		5	9	44			13
Separator: separated			1							2
non-separated							1			
Replicate 8, Treatment 4, 20 May, Bar spacing 17 mm, flow diverters off										
Tanks: separated	1		19			1	1	1		38
non-separated	1		13		2		1	2		6
Separator: separated			2							2
non-separated										
Replicate 9, Treatment 4, 22 May, Bar spacing 17 mm, flow diverters off										
Tanks: separated	8		60		1					88
non-separated			32		17	2	17	12		29
Separator: separated			11			1				4
non-separated										
Replicate 11, Treatment 4, 23 June, Bar spacing 17 mm, flow diverters off										
Tanks: separated	278									
non-separated	26									
Separator: separated										
non-separated						1				
Replicate 12, Treatment 4, 25 June, Bar spacing 17 mm, flow diverters off										
Tanks: separated	130									
non-separated	17									
Separator: separated										
non-separated										
Replicate 13, Treatment 4, 26 June, Bar spacing 17 mm, flow diverters off										
Tanks: separated	53									
non-separated	12									
Separator: separated										
non-separated										

Appendix Table 1. Continued.

	Subyearling chinook		Yearling chinook		Steelhead		Coho		Sockeye	
Source	<180	180	<180	180	<180	180	<180	180	<180	180
Replicate 14, Treatment 4, 29 June, Bar spacing 17 mm, flow diverters off										
Tanks: separated	151									
non-separated	9									
Separator: separated	5									
non-separated										
Replicate 15, Treatment 4, 30 June, Bar spacing 17 mm, flow diverters off										
Tanks: separated	496									
non-separated	60									
Separator: separated	1									
non-separated										
Replicate 16, Treatment 4, 2 July, Bar spacing 17 mm, flow diverters off										
Tanks: separated	110		3							
non-separated										
Separator: separated										
non-separated										
Replicate 17, Treatment 4, 6 July, Bar spacing 17 mm, flow diverters off										
Tanks: separated	17									
non-separated	22									
Separator: separated	45									
non-separated										
Replicate 18, Treatment 4, 8 July, Bar spacing 17 mm, flow diverters off										
Tanks: separated	127									
non-separated	20									
Separator: separated	101									
non-separated										
Replicate 19, Treatment 4, 9 July, Bar spacing 17 mm, flow diverters off										
Tanks: separated	104									
non-separated	25									
Separator: separated	101									
non-separated	1									
Replicate 20, Treatment 4, 10 July, Bar spacing 17 mm, flow diverters off										
Tanks: separated	56		1							
non-separated	3									
Separator: separated										
non-separated										
Replicate 21, Treatment 4, 13 July, Bar spacing 17 mm, flow diverters off										
Tanks: separated	38									
non-separated	5									
Separator: separated	26									
non-separated										

Appendix Table 1. Continued.

	Subyearling chinook		Yearling chinook		Steelhead		Coho		Sockeye	
Source	<180	180	<180	180	<180	180	<180	180	<180	180
Replicate 22, Treatment 4, 14 July, Bar spacing 17 mm, flow diverters off										
Tanks: separated	122									
non-separated	15									
Separator: separated	54									
non-separated										
Replicate 23, Treatment 4, 15 July, Bar spacing 17 mm, flow diverters off										
Tanks: separated	126									
non-separated	5									
Separator: separated	50									
non-separated	1									
Replicate 24, Treatment 4, 20 July, Bar spacing 17 mm, flow diverters off										
Tanks: separated	58									
non-separated	3			1						
Separator: separated	46									
non-separated										
Replicate 25, Treatment 4, 24 July, Bar spacing 17 mm, flow diverters off										
Tanks: separated	53									
non-separated	12									
Separator: separated	23									
non-separated										
Replicate 1, Treatment 5, 29 April, Bar spacing 19 mm, flow diverters on										
Tanks: separated			105		4	3	3			17
non-separated			10		5		3			1
Separator: separated										
non-separated										
Replicate 2, Treatment 5, 4 May, Bar spacing 19 mm, flow diverters on										
Tanks: separated			63				1			14
non-separated			11				5			
Separator: separated			19							
non-separated										
Replicate 3, Treatment 5, 7 May, Bar spacing 19 mm, flow diverters on										
Tanks: separated			16					1		47
non-separated			13			2	4			18
Separator: separated			17					1		15
non-separated										
Replicate 4, Treatment 5, 11 May, Bar spacing 19 mm, flow diverters on										
Tanks: separated			18		2	3	6			127
non-separated			3		3	2	18	2		8
Separator: separated			5				4	2		9
non-separated										

Appendix Table 1. Continued.

	Subyearling chinook		Yearling chinook		Steelhead		Coho		Sockeye	
Source	<180	180	<180	180	<180	180	<180	180	<180	180
Replicate 5, Treatment 5, 12 May, Bar spacing 19 mm, flow diverters on										
Tanks: separated			37		1	1	1			324
non-separated			7							4
Separator: separated			7			1				3
non-separated					1					
Replicate 6, Treatment 5, 14 May, Bar spacing 19 mm, flow diverters on										
Tanks: separated			2							40
non-separated			1		1					6
Separator: separated			7		1		1	1		5
non-separated										
Replicate 7, Treatment 5, 18 May, Bar spacing 19 mm, flow diverters on										
Tanks: separated			47			6				38
non-separated			14				2			9
Separator: separated			2							2
non-separated										
Replicate 8, Treatment 5, 20 May, Bar spacing 19 mm, flow diverters on										
Tanks: separated			17			1	2			13
non-separated			3			1	10			
Separator: separated										
non-separated										
Replicate 9, Treatment 5, 26 May, Bar spacing 19 mm, flow diverters on										
Tanks: separated	11		13		2		1	2		18
non-separated	4		10		8	4	37	5		6
Separator: separated										
non-separated			2							
Replicate 11, Treatment 5, 24 June, Bar spacing 19 mm, flow diverters on										
Tanks: separated	149									
non-separated	37									
Separator: separated	20									
non-separated	1									
Replicate 12, Treatment 5, 25 June, Bar spacing 19 mm, flow diverters on										
Tanks: separated	194									
non-separated	16									
Separator: separated	2									
non-separated	1									
Replicate 12, Treatment 5, 25 June, Bar spacing 19 mm, flow diverters on										
Tanks: separated										
non-separated										
Separator: separated										
non-separated										

Appendix Table 1. Continued.

	Subyearling chinook		Yearling chinook		Steelhead		Coho		Sockeye	
Source	<180	180	<180	180	<180	180	<180	180	<180	180
Replicate 13, Treatment 5, 26 June, Bar spacing 19 mm, flow diverters on										
Tanks: separated	87									
non-separated	21									
Separator: separated	6									
non-separated										
Replicate 14, Treatment 5, 29 June, Bar spacing 19 mm, flow diverters on										
Tanks: separated	190									
non-separated	56									
Separator: separated	78									
non-separated										
Replicate 14, Treatment 5, 30 June, Bar spacing 19 mm, flow diverters on										
Tanks: separated	1125									
non-separated	21									
Separator: separated	32									
non-separated										
Replicate 16, Treatment 5, 2 July, Bar spacing 19 mm, flow diverters on										
Tanks: separated	134		5							
non-separated	5									
Separator: separated	34									
non-separated										
Replicate 17, Treatment 5, 7 July, Bar spacing 19 mm, flow diverters on										
Tanks: separated	137									
non-separated	11									
Separator: separated	27									
non-separated										
Replicate 18, Treatment 5, 8 July, Bar spacing 19 mm, flow diverters on										
Tanks: separated	110									
non-separated	13									
Separator: separated	53									
non-separated										
Replicate 19, Treatment 5, 9 July, Bar spacing 19 mm, flow diverters on										
Tanks: separated	142		1							
non-separated	17		1							
Separator: separated	66									
non-separated										
Replicate 20, Treatment 5, 10 July, Bar spacing 19 mm, flow diverters on										
Tanks: separated	59									
non-separated	12									
Separator: separated	7									
non-separated										

Appendix Table 1. Continued.

	Subyearling chinook		Yearling chinook		Steelhead		Coho		Sockeye	
Source	<180	180	<180	180	<180	180	<180	180	<180	180
Replicate 21, Treatment 5, 13 July, Bar spacing 19 mm, flow diverters on										
Tanks: separated	65									
non-separated	8									
Separator: separated	36									
non-separated										
Replicate 22, Treatment 5, 14 July, Bar spacing 19 mm, flow diverters on										
Tanks: separated	118									
non-separated	5									
Separator: separated	91									
non-separated										
Replicate 23, Treatment 5, 16 July, Bar spacing 19 mm, flow diverters on										
Tanks: separated	24									
non-separated	12									
Separator: separated	31									
non-separated										
Replicate 24, Treatment 5, 22 July, Bar spacing 19 mm, flow diverters on										
Tanks: separated	58									
non-separated	9									
Separator: separated	11									
non-separated										
Replicate 25, Treatment 5, 27 July, Bar spacing 19 mm, flow diverters on										
Tanks: separated	91									
non-separated	12									
Separator: separated	19									
non-separated										
Replicate 1, Treatment 6, 29 April, Bar spacing 19 mm, flow diverters off										
Tanks: separated			45		4	1	2			6
non-separated			14		3	1	14			2
Separator: separated										
non-separated										
Replicate 2, Treatment 6, 4 May, Bar spacing 19 mm, flow diverters off										
Tanks: separated			95				6			10
non-separated			35		5	4	7			3
Separator: separated			22							3
non-separated			1							
Replicate 3, Treatment 6, 6 May, Bar spacing 19 mm, flow diverters off										
Tanks: separated			9			1	6			19
non-separated			8			4	17			10
Separator: separated							1			
non-separated										

Appendix Table 1. Continued.

	Subyearling chinook		Yearling chinook		Steelhead		Coho		Sockeye	
Source	<180	180	<180	180	<180	180	<180	180	<180	180
Replicate 4, Treatment 6, 8 May, Bar spacing 19 mm, flow diverters off										
Tanks: separated			13			1	7			11
non-separated			11		4	2	28			6
Separator: separated										
non-separated										
Replicate 5, Treatment 6, 12 May, Bar spacing 19 mm, flow diverters off										
Tanks: separated			34		1	2	5			68
non-separated			17		3	1	11			
Separator: separated										
non-separated										
Replicate 6, Treatment 6, 13 May, Bar spacing 19 mm, flow diverters off										
Tanks: separated			16				7			20
non-separated			11		1	4	39			5
Separator: separated										
non-separated										
Replicate 7, Treatment 6, 18 May, Bar spacing 19 mm, flow diverters off										
Tanks: separated			27		1	2				45
non-separated			22				5			11
Separator: separated			5							2
non-separated										
Replicate 8, Treatment 6, 20 May, Bar spacing 19 mm, flow diverters off										
Tanks: separated	1		26		1	4				27
non-separated	4		27		2					16
Separator: separated			2			1				
non-separated										
Replicate 9, Treatment 6, 27 May, Bar spacing 19 mm, flow diverters off										
Tanks: separated	9		17					7		23
non-separated	6		18		3	6	26	7	7	
Separator: separated		14	1			2	1		3	
non-separated										
Replicate 11, Treatment 6, 24 June, Bar spacing 19 mm, flow diverters off										
Tanks: separated	177									
non-separated	38									
Separator: separated										
non-separated										
Replicate 12, Treatment 6, 25 June, Bar spacing 19 mm, flow diverters off										
Tanks: separated	290		1							
non-separated	44									
Separator: separated	15									
non-separated										

Appendix Table 1. Continued.

	Subyearling chinook		Yearling chinook		Steelhead		Coho		Sockeye	
Source	<180	180	<180	180	<180	180	<180	180	<180	180
Replicate 13, Treatment 6, 26 June, Bar spacing 19 mm, flow diverters off										
Tanks: separated	100									
non-separated	22									
Separator: separated	11									
non-separated										
Replicate 14, Treatment 6, 30 June, Bar spacing 19 mm, flow diverters off										
Tanks: separated	110									
non-separated	38									
Separator: separated	4									
non-separated										
Replicate 15, Treatment 6, 30 June, Bar spacing 19 mm, flow diverters off										
Tanks: separated	30									
non-separated	5									
Separator: separated	1									
non-separated										
Replicate 16, Treatment 6, 2 July, Bar spacing 19 mm, flow diverters off										
Tanks: separated	111	1								
non-separated	16	2								
Separator: separated	39									
non-separated										
Replicate 17, Treatment 6, 7 July, Bar spacing 19 mm, flow diverters off										
Tanks: separated	95									
non-separated	16									
Separator: separated	25									
non-separated	1									
Replicate 18, Treatment 6, 8 July, Bar spacing 19 mm, flow diverters off										
Tanks: separated	116									
non-separated	15									
Separator: separated	68									
non-separated										
Replicate 19, Treatment 6, 9 July, Bar spacing 19 mm, flow diverters off										
Tanks: separated	84									
non-separated	9									
Separator: separated	87									
non-separated										
Replicate 20, Treatment 6, 10 July, Bar spacing 19 mm, flow diverters off										
Tanks: separated	53									
non-separated	6									
Separator: separated	80									
non-separated										

Appendix Table 1. Continued.

	Subyearling chinook		Yearling chinook		Steelhead		Coho		Sockeye	
Source	<180	180	<180	180	<180	180	<180	180	<180	180
Replicate 21, Treatment 6, 13 July, Bar spacing 19 mm, flow diverters off										
Tanks: separated	148									
non-separated	7									
Separator: separated	92									
non-separated										
Replicate 22, Treatment 6, 14 July, Bar spacing 19 mm, flow diverters off										
Tanks: separated	108									
non-separated	4									
Separator: separated	139									
non-separated	1									
Replicate 23, Treatment 6, 16 July, Bar spacing 19 mm, flow diverters off										
Tanks: separated	68									
non-separated	17									
Separator: separated	105									
non-separated										
Replicate 24, Treatment 6, 22 July, Bar spacing 19 mm, flow diverters off										
Tanks: separated	58									
non-separated	10									
Separator: separated	11									
non-separated	2									
Replicate 25, Treatment 6, 28 July, Bar spacing 19 mm, flow diverters off										
Tanks: separated	82									
non-separated	18									
Separator: separated	114									
non-separated										

Appendix Table 2. Incidental species captured during separator efficiency studies using a McNary-style wet separator and a high-velocity flume wet separator during biological design criteria studies at McNary Dam, 27 April--30 July, 1998. Species are listed in order of total capture frequency.

Common name	Scientific name	Conventional wet separator	HVF flume wet separator	Total catch
lamprey	*Lampetra tridentata*	1,163	3,119	4,282
sucker	*Catostomus* spp.	25	48	73
shad	*Alosa sapidissima*	29	42	71
yellow perch	*Perca flavescens*	6	19	25
chiselmouth	*Acrocheilus alutaceus*	9	25	34
whitefish	*Prosopium williamsoni*	10	39	49
peamouth	*Mylocheilus caurinus*	3	11	14
redside shiner	*Richardsonius balteatus*	1	3	4
carp	*Cyprinus carpio*		3	3
sand roller	*Columbia transmontanus*		3	3
northern pikeminnow	*Ptychocheilus oregonensis*		3	3
bass	*Micropterus* spp.	1	1	2
stickleback	*Gasterosteus aculeatus*	1		1
white sturgeon	*Acipenser transmontanus*		1	1

Appendix Table 3. Analyses of covariance results among mean separation efficiency values obtained for treatments involving separation-bar spacing (gap) and flow diverter (diverter) condition during biological design criteria studies using a simulated conventional wet separator at McNary Dam, 1998. Sample date (date) was included as a covariate where the analysis was not seriously affected by combining samples from successive replicates. A significant difference (= 0.05) among means is indicated by an asterisk.

Species	Length group	Analysis source	F	df	P
Yearling chinook salmon	<180 mm	date	9.64	1	0.004*
		gap	13.10	2	0.000*
		diverter	14.35	1	0.001*
		gap vs. diverter	1.53	2	0.230
	total catch	date	6.32	1	0.000*
		gap	2.91	2	0.066
		diverter	3.13	1	0.085
		gap vs. diverter	0.17	2	0.846
Steelhead	180 mm	gap	9.10	2	0.002*
		diverter	0.31	1	0.586
		gap vs. diverter	0.46	2	0.642
	total catch	gap	0.37	2	0.696
		diverter	0.03	1	0.870
		gap vs. diverter	0.10	2	0.905
Sockeye	<180 mm	gap	2.62	2	0.88
		diverter	0.21	1	0.648
		gap vs. diverter	4.15	2	0.025*
Total salmonid species (spring outmigration)	<180 mm	date	13.28	1	0.001*
		gap	7.75	2	0.001*
		diverter	5.12	1	0.028*
		gap vs. diverter	2.60	2	0.084
	180 mm	gap	23.12	2	0.000*
		diverter	2.20	1	0.152
		gap vs. diverter	0.35	2	0.712

Appendix Table 3. Continued.

Species	Length group	Analysis source	F	dfP
Total salmonid species (spring outmigration)	total catch	date	11.82	10.001*
		gap	4.70	2
	0.013*			
		diverter	6.72	1
	0.012			
		gap vs. diverter	2.63	2
	0.082			
Subyearling chinook salmon	<180 mm	date	9.45	10.003*
		gap	9.99	2
	0.000*			
		diverter	0.05	1
	0.824			
		gap vs. diverter	1.10	2
	0.338			

Appendix Table 4. Analyses of covariance results among mean separator exit efficiency values obtained for treatments involving separation-bar spacing (gap) and flow diverter (diverter) condition during biological design criteria studies using a simulated conventional wet separator at McNary Dam, 1998. Sample date (date) was included as a covariate where the analysis was not seriously affected by combining samples from successive replicates. A significant difference (= 0.05) among means is indicated by an asterisk.

Species	Length group	Analysis source	F	df	P
Yearling chinook salmon	<180 mm	date	0.00	1	0.987
		gap	0.73	2	0.487
		diverter	0.09	1	0.760
		gap vs. diverter	1.60	2	0.214
	total catch	date	0.04	1	0.851
		gap	0.63	2	0.537
		diverter	0.09	1	0.763
		gap vs. diverter	1.76	2	0.186
Steelhead	180 mm	gap	0.80	2	0.464
		diverter	0.56	1	0.465
		gap vs. diverter	2.06	2	0.160
	total catch	gap	0.25	2	0.784
		diverter	1.53	1	0.231
		gap vs. diverter	1.92	2	0.173
Sockeye	<180 mm	gap	0.07	2	0.933
		diverter	0.04	1	0.851
		gap vs. diverter	2.60	2	0.091
Total salmonid species (spring outmigration)	<180 mm	date	2.13	1	0.150
		gap	0.99	2	0.380
		diverter	0.36	1	0.554
		gap vs. diverter	2.51	2	0.092
	180 mm	gap	0.31	2	0.736
		diverter	0.02	1	0.892
		gap vs. diverter	1.47	2	0.252
Total salmonid species (spring outmigration)	total catch	date	1.19	1	0.280
		gap	1.86	2	0.167
		diverter	0.02	1	0.886
		gap vs. diverter	4.59	2	0.015*
Subyearling chinook salmon	<180 mm	date	46.50	1	0.000*
		gap	5.32	2	0.007*
		diverter	0.33	1	0.566
		gap vs. diverter	1.55	2	0.219

Appendix Table 5. Analyses of covariance results among descaling values obtained for treatments involving separation-bar spacing (gap) and flow diverter (diverter) condition using a simulated conventional wet separator during biological design criteria studies at McNary Dam, 1998. Sample date (date) was included as a covariate where the analysis was not seriously affected by combining samples from successive replicates. A significant difference (= 0.05) among means is indicated by an asterisk.

Species	Length group	Analysis source	F	df	P
Yearling chinook salmon	<180 mm	date	0.00	1	0.987
		gap	0.73	2	0.487
		diverter	0.09	1	0.760
		gap vs. diverter	1.60	2	0.214
	total catch	date	0.28	1	0.602
		gap	0.26	2	0.776
		diverter	0.08	1	0.777
		gap vs. diverter	1.25	2	0.296
Steelhead	180 mm	gap	0.99	2	0.394
		diverter	3.24	1	0.091
		gap vs. diverter	0.09	2	0.916
	total catch	gap	0.62	2	0.547
		diverter	2.67	1	0.118
		gap vs. diverter	0.18	2	0.840
Sockeye	<180 mm	gap	1.85	2	0.174
		diverter	0.31	1	0.580
		gap vs. diverter	0.22	2	0.800
Total salmonid species (spring outmigration)	<180 mm	date	2.96	1	0.092
		gap	0.43	2	0.651
		diverter	0.01	1	0.916
		gap vs. diverter	0.24	2	0.785
	180 mm	gap	3.20	2	0.061
		diverter	0.00	1	0.985
		gap vs. diverter	0.36	2	0.702
Total salmonid species (spring outmigration)	total catch	date	1.00	1	0.322
		gap	0.02	2	0.975
		diverter	0.02	1	0.902
		gap vs. diverter	0.25	2	0.778
Subyearling chinook salmon	<180 mm	date	29.17	1	0.000*
		gap	0.08	2	0.926
		diverter	0.09	1	0.766
		gap vs. diverter	0.04	2	0.958

Appendix Table 6. Total catch, by species and length group (by fork length in millimeters), for individual replicates of separation efficiency tests using a high-velocity flume separator at McNary Dam, 1998.

	Subyearling chinook		Yearling chinook		Steelhead		Coho		Sockeye	
Source	<180	180	<180	180	<180	180	<180	180	<180	180
Replicate 1, Treatment 1, 27 April, Bar spacing 13 mm, water velocity 1 m/s, bars angled										
Tanks: separated			41							
non-separated			71	5	1	1				
Separator: separated										
non-separated										
Replicate 2, Treatment 1, 4 May, Bar spacing 13 mm, water velocity 1 m/s, bars angled										
Tanks: separated			31						16	
non-separated			36	2	2	2			12	
Separator: separated			3							
non-separated			5	1	2					
Replicate 3, Treatment 1, 7 May, Bar spacing 13 mm, water velocity 1 m/s, bars angled										
Tanks: separated			1						28	
non-separated			28	1	4	6			33	
Separator: separated			3		1				2	
non-separated			2			2				
Replicate 4, Treatment 1, 11 May, Bar spacing 13 mm, water velocity 1 m/s, bars angled										
Tanks: separated			4						21	
non-separated			29	2	1	14				
Separator: separated			1							
non-separated			3		1	9				
Replicate 12, Treatment 1, 22 June, Bar spacing 13 mm, water velocity 1 m/s, bars angled										
Tanks: separated	104									
non-separated	8		1							
Separator: separated	2									
non-separated										
Replicate 13, Treatment 1, 24 June, Bar spacing 13 mm, water velocity 1 m/s, bars angled										
Tanks: separated	175									
non-separated	50		1	1						
Separator: separated	2									
non-separated										
Replicate 14, Treatment 1, 29 June, Bar spacing 13 mm, water velocity 1 m/s, bars angled										
Tanks: separated	151		2							
non-separated	31		5							
Separator: separated	9									
non-separated										

Appendix Table 6. Continued.

	Subyearling chinook		Yearling chinook		Steelhead		Coho		Sockeye	
Source	<180	180	<180	180	<180	180	<180	180	<180	180
Replicate 15, Treatment 1, 30 June, Bar spacing 13 mm, water velocity 1 m/s, bars angled										
Tanks: separated	54									
non-separated	34									
Separator: separated	1									
non-separated										
Replicate 16, Treatment 1, 6 July, Bar spacing 13 mm, water velocity 1 m/s, bars angled										
Tanks: separated	98									
non-separated	14									
Separator: separated	1									
non-separated										
Replicate 17, Treatment 1, 17 July, Bar spacing 13 mm, water velocity 1 m/s, bars angled										
Tanks: separated	324									
non-separated	7									
Separator: separated	1									
non-separated										
Replicate 18, Treatment 1, 9 July, Bar spacing 13 mm, water velocity 1 m/s, bars angled										
Tanks: separated	226									
non-separated	51									
Separator: separated	23									
non-separated										
Replicate 19, Treatment 1, 13 July, Bar spacing 13 mm, water velocity 1 m/s, bars angled										
Tanks: separated	113									
non-separated	45		1							
Separator: separated	15									
non-separated										
Replicate 20, Treatment 1, 14 July, Bar spacing 13 mm, water velocity 1 m/s, bars angled										
Tanks: separated	181									
non-separated	50		1							
Separator: separated	37		3							
non-separated										
Replicate 21, Treatment 1, 20 July, Bar spacing 13 mm, water velocity 1 m/s, bars angled										
Tanks: separated	21									
non-separated	45									
Separator: separated	25									
non-separated										

Appendix Table 6. Continued.

	Subyearling chinook		Yearling chinook		Steelhead		Coho		Sockeye	
Source	<180	180	<180	180	<180	180	<180	180	<180	180
Replicate 22, Treatment 1, 23 July, Bar spacing 13 mm, water velocity 1 m/s, bars angled										
Tanks: separated	22									
non-separated	45									
Separator: separated	17									
non-separated	5									
Replicate 23, Treatment 1, 27 July, Bar spacing 13 mm, water velocity 1 m/s, bars angled										
Tanks: separated	24									
non-separated	42									
Separator: separated	2									
non-separated										
Replicate 2, Treatment 2, 4 May, Bar spacing 13 mm, water velocity 2 m/s, bars angled										
Tanks: separated			8						13	
non-separated			42	5	1	3			2	
Separator: separated										
non-separated										
Replicate 3, Treatment 2, 7 May, Bar spacing 13 mm, water velocity 2 m/s, bars angled										
Tanks: separated			6						8	
non-separated			32			5			14	
Separator: separated										
non-separated						1				
Replicate 4, Treatment 2,12 May, Bar spacing 13 mm, water velocity 2 m/s, bars angled										
Tanks: separated				7					10	
non-separated			19	3	1	4	3		13	
Separator: separated										
non-separated										
Replicate 12, Treatment 2, 22 June, Bar spacing 13 mm, water velocity 2 m/s, bars angled										
Tanks: separated	91									
non-separated	75		1							
Separator: separated	1									
non-separated										
Replicate 13, Treatment 2, 24 June, Bar spacing 13 mm, water velocity 2 m/s, bars angled										
Tanks: separated	150									
non-separated	71									
Separator: separated										
non-separated										

Appendix Table 6. Continued.

	Subyearling chinook		Yearling chinook		Steelhead		Coho		Sockeye	
Source	<180	180	<180	180	<180	180	<180	180	<180	180
Replicate 14, Treatment 2, 29 June, Bar spacing 13 mm, water velocity 2 m/s, bars angled										
Tanks: separated	43									
non-separated	24		1	1						
Separator: separated										
non-separated										
Replicate 15, Treatment 2, 30 June, Bar spacing 13 mm, water velocity 2 m/s, bars angled										
Tanks: separated	177									
non-separated	164		1							
Separator: separated										
non-separated										
Replicate 16, Treatment 2, 6 July, Bar spacing 13 mm, water velocity 2 m/s, bars angled										
Tanks: separated	70									
non-separated	20									
Separator: separated										
non-separated	1									
Replicate 17, Treatment 2, 7 July, Bar spacing 13 mm, water velocity 2 m/s, bars angled										
Tanks: separated	634									
non-separated	37									
Separator: separated										
non-separated										
Replicate 18, Treatment 2, 9 July, Bar spacing 13 mm, water velocity 2 m/s, bars angled										
Tanks: separated	245		2							
non-separated	63		1							
Separator: separated										
non-separated										
Replicate 19, Treatment 2, 13 July , Bar spacing 13 mm, water velocity 2 m/s, bars angled										
Tanks: separated	60									
non-separated	37		1							
Separator: separated	3									
non-separated										
Replicate 20, Treatment 2, 15 July, Bar spacing 13 mm, water velocity 2 m/s, bars angled										
Tanks: separated	76									
non-separated	61									
Separator: separated	6									
non-separated										

Appendix Table 6. Continued.

	Subyearling chinook		Yearling chinook		Steelhead		Coho		Sockeye	
Source	<180	180	<180	180	<180	180	<180	180	<180	180
Replicate 21, Treatment 2, 20 July, Bar spacing 13 mm, water velocity 2 m/s, bars angled										
Tanks: separated	51									
non-separated	20									
Separator: separated	3									
non-separated										
Replicate 22, Treatment 2, 22 July, Bar spacing 13 mm, water velocity 2 m/s, bars angled										
Tanks: separated	19									
non-separated	47									
Separator: separated										
non-separated										
Replicate 23, Treatment 2, 24 July, Bar spacing 13 mm, water velocity 2 m/s, bars angled										
Tanks: separated	87		1							
non-separated	96									
Separator: separated										
non-separated										
Replicate 1, Treatment 3, 27 April, Bar spacing 13 mm, water velocity 1 m/s, bars flat										
Tanks: separated			24						1	
non-separated			30	2	2	5			1	
Separator: separated										
non-separated										
Replicate 2, Treatment 3, 4 May, Bar spacing 13 mm, water velocity 1 m/s, bars flat										
Tanks: separated			40		1	2			14	
non-separated			27			12			5	
Separator: separated						1				
non-separated			1							
Replicate 3, Treatment 3, 7 May, Bar spacing 13 mm, water velocity 1 m/s, bars flat										
Tanks: separated			12	2					23	
non-separated			38	7	5	35			5	
Separator: separated										
non-separated						1				
Replicate 4, Treatment 3, 12 May, Bar spacing 13 mm, water velocity 1 m/s, bars flat										
Tanks: separated			22						14	
non-separated			26	4		2	1		2	
Separator: separated										
non-separated										

Appendix Table 6. Continued.

		Subyearling chinook		Yearling chinook		Steelhead		Coho		Sockeye	
Source		<180	180	<180	180	<180	180	<180	180	<180	180
Replicate 12, Treatment 3, 22 June, Bar spacing 13 mm, water velocity 1 m/s, bars flat											
Tanks:	separated	109									
	non-separated	13		2							
Separator:	separated	3									
	non-separated										
Replicate 13, Treatment 3, 25 june, Bar spacing 13 mm, water velocity 1 m/s, bars flat											
Tanks:	separated	146									
	non-separated	31									
Separator:	separated										
	non-separated										
Replicate 14, Treatment 3, 29 June, Bar spacing 13 mm, water velocity 1 m/s, bars flat											
Tanks:	separated	182		2							
	non-separated	5									
Separator:	separated	1									
	non-separated										
Replicate 15, Treatment 3, 30 June, Bar spacing 13 mm, water velocity 1 m/s, bars flat											
Tanks:	separated	160									
	non-separated	13									
Separator:	separated										
	non-separated										
Replicate 16, Treatment 3, 6 July, Bar spacing 13 mm, water velocity 1 m/s, bars flat											
Tanks:	separated	95		2							
	non-separated	14		1							
Separator:	separated	2									
	non-separated										
Replicate 17, Treatment 3, 7 July, Bar spacing 13 mm, water velocity 1 m/s, bars flat											
Tanks:	separated	431									
	non-separated	27									
Separator:	separated	12									
	non-separated										
Replicate 18, Treatment 3, 9 July, Bar spacing 13 mm, water velocity 1 m/s, bars flat											
Tanks:	separated	377									
	non-separated	72									
Separator:	separated	5									
	non-separated										

Appendix Table 6. Continued.

	Subyearling chinook		Yearling chinook		Steelhead		Coho		Sockeye	
Source	<180	180	<180	180	<180	180	<180	180	<180	180
Replicate 19, Treatment 3, 13 July, Bar spacing 13 mm, water velocity 1 m/s, bars flat										
Tanks: separated	132									
non-separated	37		1							
Separator: separated										
non-separated										
Replicate 20, Treatment 3, 14 July, Bar spacing 13 mm, water velocity 1 m/s, bars flat										
Tanks: separated	240									
non-separated	35									
Separator: separated										
non-separated	3									
Replicate 21, Treatment 3, 20 July, Bar spacing 13 mm, water velocity 1 m/s, bars flat										
Tanks: separated	86									
non-separated	24									
Separator: separated	1									
non-separated										
Replicate 22, Treatment 3, 22 July, Bar spacing 13 mm, water velocity 1 m/s, bars flat										
Tanks: separated	54									
non-separated	20									
Separator: separated										
non-separated										
Replicate 12, Treatment 3, 22 June, Bar spacing 13 mm, water velocity 1 m/s, bars flat										
Tanks: separated										
non-separated										
Separator: separated										
non-separated										
Replicate 23, Treatment 3, 27 July, Bar spacing 13 mm, water velocity 1 m/s, bars flat										
Tanks: separated	38									
non-separated	54									
Separator: separated	4									
non-separated										
Replicate 1, Treatment 4, 27 April, Bar spacing 13 mm, water velocity 2 m/s, bars flat										
Tanks: separated			59	3		2				2
non-separated			31	1		1				1
Separator: separated										
non-separated						1				

Appendix Table 6. Continued.

	Subyearling chinook		Yearling chinook		Steelhead		Coho		Sockeye	
Source	<180	180	<180	180	<180	180	<180	180	<180	180
Replicate 2, Treatment 4, 4 May, Bar spacing 13 mm, water velocity 2 m/s, bars flat										
Tanks: separated			26						9	
non-separated			55	1		5			20	
Separator: separated										
non-separated										
Replicate 3, Treatment 4, 7 May, Bar spacing 13 mm, water velocity 2 m/s, bars flat										
Tanks: separated			19		1	1			48	
non-separated	1		43	6		8	2		20	
Separator: separated										
non-separated										
Replicate 4, Treatment 4, 11 May, Bar spacing 13 mm, water velocity 2 m/s, bars flat										
Tanks: separated			8		1	1			14	
non-separated			22	2	1	9			3	
Separator: separated										
non-separated										
Replicate 12, Treatment 4, 22 June, Bar spacing 13 mm, water velocity 2 m/s, bars flat										
Tanks: separated	86									
non-separated	41		5							
Separator: separated										
non-separated										
Replicate 13, Treatment 4, 25 June, Bar spacing 13 mm, water velocity 2 m/s, bars flat										
Tanks: separated	190									
non-separated	42									
Separator: separated										
non-separated										
Replicate 14, Treatment 4, 29 June, Bar spacing 13 mm, water velocity 2 m/s, bars flat										
Tanks: separated	136		1							
non-separated	23		1							
Separator: separated										
non-separated										
Replicate 15, Treatment 4, 30 June, Bar spacing 13 mm, water velocity 2 m/s, bars flat										
Tanks: separated	181		1							
non-separated	198									
Separator: separated										
non-separated										

Appendix Table 6. Continued.

	Subyearling chinook		Yearling chinook		Steelhead		Coho		Sockeye	
Source	<180	180	<180	180	<180	180	<180	180	<180	180
Replicate 16, Treatment 4, 2 July, Bar spacing 13 mm, water velocity 2 m/s, bars flat										
Tanks: separated	1866									
non-separated	68		2							
Separator: separated										
non-separated										
Replicate 17, Treatment 4, 7 July, Bar spacing 13 mm, water velocity 2 m/s, bars flat										
Tanks: separated	414									
non-separated	131									
Separator: separated	2									
non-separated										
Replicate 18, Treatment 4, 9 July, Bar spacing 13 mm, water velocity 2 m/s, bars flat										
Tanks: separated	390									
non-separated	28									
Separator: separated	3									
non-separated										
Replicate 19, Treatment 4, 13 July, Bar spacing 13 mm, water velocity 2 m/s, bars flat										
Tanks: separated	76		1							
non-separated	33									
Separator: separated										
non-separated										
Replicate 20, Treatment 4, 15 July, Bar spacing 13 mm, water velocity 2 m/s, bars flat										
Tanks: separated	79									
non-separated	60									
Separator: separated										
non-separated										
Replicate 21, Treatment 4, 20 July, Bar spacing 13 mm, water velocity 2 m/s, bars flat										
Tanks: separated	30									
non-separated	38									
Separator: separated										
non-separated										
Replicate 22, Treatment 4, 23 July, Bar spacing 13 mm, water velocity 2 m/s, bars flat										
Tanks: separated	17									
non-separated	47									
Separator: separated										
non-separated										

Appendix Table 6. Continued.

	Subyearling chinook		Yearling chinook		Steelhead		Coho		Sockeye	
Source	<180	180	<180	180	<180	180	<180	180	<180	180
Replicate 23, Treatment 4, 24 July, Bar spacing 13 mm, water velocity 2 m/s, bars flat										
Tanks: separated	55									
non-separated	26									
Separator: separated										
non-separated										
Replicate 1, Treatment 5, 29 April, Bar spacing 16 mm, water velocity 1 m/s, bars angled										
Tanks: separated			33							
non-separated			26	10	1	14	2		1	
Separator: separated			10							
non-separated			1	3		4				
Replicate 2, Treatment 5, 6 May, Bar spacing 16 mm, water velocity 1 m/s, bars angled										
Tanks: separated			34		2		1		11	
non-separated			6	1		2			14	
Separator: separated			9			1				
non-separated						8				
Replicate 3, Treatment 5, 8 May, Bar spacing 16 mm, water velocity 1 m/s, bars angled										
Tanks: separated			16				1		44	
non-separated			8	4		12	1		12	
Separator: separated			4		2	1	1		1	
non-separated				1		13				
Replicate 4, Treatment 5, 12 May, Bar spacing 16 mm, water velocity 1 m/s, bars angled										
Tanks: separated			22		2				12	
non-separated			33	6	2	43			9	
Separator: separated			2		1	4				
non-separated						6				
Replicate 5, Treatment 5, 14 May, Bar spacing 16 mm, water velocity 1 m/s, bars angled										
Tanks: separated			17		3				25	
non-separated			14	7	2	36			5	
Separator: separated						1				
non-separated						1				
Replicate 6, Treatment 5, 18 May, Bar spacing 16 mm, water velocity 1 m/s, bars angled										
Tanks: separated			45		1		2		46	
non-separated			20	2	1	1			24	
Separator: separated			24			1	5		3	
non-separated				1						

Appendix Table 6. Continued.

	Subyearling chinook		Yearling chinook		Steelhead		Coho		Sockeye	
Source	<180	180	<180	180	<180	180	<180	180	<180	180
Replicate 7, Treatment 5, 20 May, Bar spacing 16 mm, water velocity 1 m/s, bars angled										
Tanks: separated	9		45			1			10	
non-separated	1		7	2					4	
Separator: separated	1		21						4	
non-separated			4	1		4				
Replicate 8, Treatment 5, 22 May, Bar spacing 16 mm, water velocity 1 m/s, bars angled										
Tanks: separated	6		25		1				19	
non-separated	3		16	3	3	3	2		12	
Separator: separated			3			2			1	
non-separated						1				
Replicate 9, Treatment 5, 27 May, Bar spacing 16 mm, water velocity 1 m/s, bars angled										
Tanks: separated	42		19				5		23	
non-separated	21		12	7	2	9	2		1	
Separator: separated	2		3		1		1		1	
non-separated						6	1			
Replicate 10, Treatment 5, 1 June, Bar spacing 16 mm, water velocity 1 m/s, bars angled										
Tanks: separated	10		4		1				5	
non-separated	55		22	7	4	23	6	1	16	
Separator: separated			4	1	3	1	9	3		
non-separated				2	3	6	1			
Replicate 11, Treatment 5, 3 June, Bar spacing 16 mm, water velocity 1 m/s, bars angled										
Tanks: separated	4		6		1		9		17	
non-separated	10		23	4	4	7	17	2	15	
Separator: separated			1	1			5	1		
non-separated				2	1	6	1			
Replicate 12, Treatment 5, 22 June, Bar spacing 16 mm, water velocity 1 m/s, bars angled										
Tanks: separated	323		1							
non-separated	4			2						
Separator: separated	1									
non-separated										
Replicate 13, Treatment 5, 26 June, Bar spacing 16 mm, water velocity 1 m/s, bars angled										
Tanks: separated	37									
non-separated	27									
Separator: separated	1									
non-separated										

Appendix Table 6. Continued.

		Subyearling chinook		Yearling chinook		Steelhead		Coho		Sockeye	
Source		<180	180	<180	180	<180	180	<180	180	<180	180
Replicate 14, Treatment 5, 29 June, Bar spacing 16 mm, water velocity 1 m/s, bars angled											
Tanks:	separated	150		1							
	non-separated	2									
Separator:	separated	4									
	non-separated										
Replicate 15, Treatment 5, 1 July, Bar spacing 16 mm, water velocity 1 m/s, bars angled											
Tanks:	separated	71									
	non-separated	73									
Separator:	separated	6									
	non-separated										
Replicate 16, Treatment 5, 6 July, Bar spacing 16 mm, water velocity 1 m/s, bars angled											
Tanks:	separated	69		1							
	non-separated	30		1							
Separator:	separated	8									
	non-separated										
Replicate 17, Treatment 5, 8 July, Bar spacing 16 mm, water velocity 1 m/s, bars angled											
Tanks:	separated	547									
	non-separated	116									
Separator:	separated	11									
	non-separated										
Replicate 18, Treatment 5, July, Bar spacing 16 mm, water velocity 1 m/s, bars angled											
Tanks:	separated	180									
	non-separated	87									
Separator:	separated	8									
	non-separated										
Replicate 19, Treatment 5, 13 July, Bar spacing 16 mm, water velocity 1 m/s, bars angled											
Tanks:	separated	166									
	non-separated	51									
Separator:	separated	6									
	non-separated										
Replicate 20, Treatment 5, 16 July, Bar spacing 16 mm, water velocity 1 m/s, bars angled											
Tanks:	separated	79									
	non-separated	1									
Separator:	separated	6									
	non-separated										

Appendix Table 6. Continued.

	Subyearling chinook		Yearling chinook		Steelhead		Coho		Sockeye	
Source	<180	180	<180	180	<180	180	<180	180	<180	180
Replicate 22, Treatment 5, 20 July, Bar spacing 16 mm, water velocity 1 m/s, bars angled										
Tanks: separated	69									
non-separated	52									
Separator: separated	11									
non-separated										
Replicate 23, Treatment 5, 23 July, Bar spacing 16 mm, water velocity 1 m/s, bars angled										
Tanks: separated	30									
non-separated	44									
Separator: separated	34									
non-separated										
Replicate 23, Treatment 5, 28 July, Bar spacing 16 mm, water velocity 1 m/s, bars angled										
Tanks: separated	29									
non-separated	35									
Separator: separated	12									
non-separated										
Replicate 1, Treatment 6, 28 April, Bar spacing 16 mm, water velocity 2 m/s, bars angled										
Tanks: separated			36		1					
non-separated			43	21					1	
Separator: separated			1							
non-separated										
Replicate 2, Treatment 6, 5 May, Bar spacing 16 mm, water velocity 2 m/s, bars angled										
Tanks: separated			36			1			4	
non-separated			32	2		7			7	
Separator: separated										
non-separated										
Replicate 3, Treatment 6, 8 May, Bar spacing 16 mm, water velocity 2 m/s, bars angled										
Tanks: separated			7						13	
non-separated			16	4	1	3			32	
Separator: separated			1							
non-separated										
Replicate 4, Treatment 6, 12 May, Bar spacing 16 mm, water velocity 2 m/s, bars angled										
Tanks: separated			15						8	
non-separated			17	5	2	53	1		5	
Separator: separated										
non-separated						4				

Appendix Table 6. Continued.

	Subyearling chinook		Yearling chinook		Steelhead		Coho		Sockeye	
Source	<180	180	<180	180	<180	180	<180	180	<180	180
Replicate 5, Treatment 6, 14 May, Bar spacing 16 mm, water velocity 2 m/s, bars angled										
Tanks: separated			14		1				15	
non-separated			28	1	5	11			38	
Separator: separated			1							
non-separated										
Replicate 6, Treatment 6, 18 May, Bar spacing 16 mm, water velocity 2 m/s, bars angled										
Tanks: separated	5		32	1	1		4		32	
non-separated	1		16	3		6	9		14	
Separator: separated			1		1		1		1	
non-separated										
Replicate 7, Treatment 6, 20 May, Bar spacing 16 mm, water velocity 2 m/s, bars angled										
Tanks: separated	1		32		1				21	
non-separated	2		30			4			14	
Separator: separated			1						1	
non-separated										
Replicate 8, Treatment 6, 22 May, Bar spacing 16 mm, water velocity 2 m/s, bars angled										
Tanks: separated	2		26		2				19	
non-separated			27	8	3	9			3	
Separator: separated										
non-separated										
Replicate 9, Treatment 6, 28 May, Bar spacing 16 mm, water velocity 2 m/s, bars angled										
Tanks: separated	39		17		1		1		3	
non-separated	20		11	7	3	17	4		7	
Separator: separated			1							
non-separated										
Replicate 10, Treatment 6, 1 June, Bar spacing 16 mm, water velocity 2 m/s, bars angled										
Tanks: separated	15		12	3	4	2	11		2	
non-separated	15		12	4	2	8	9	1		
Separator: separated										
non-separated										
Replicate 11, Treatment 6, 3 June, Bar spacing 16 mm, water velocity 2 m/s, bars angled										
Tanks: separated			5				1			
non-separated			26	3	5	12	27	1	17	
Separator: separated			1		1		1			
non-separated						1				

Appendix Table 6. Continued.

		Subyearling chinook		Yearling chinook		Steelhead		Coho		Sockeye	
Source		<180	180	<180	180	<180	180	<180	180	<180	180
Replicate 12, Treatment 6, 23 June, Bar spacing 16 mm, water velocity 2 m/s, bars angled											
Tanks:	separated	73									
	non-separated	92									
Separator:	separated										
	non-separated										
Replicate 13, Treatment 6, 25 June, Bar spacing 16 mm, water velocity 2 m/s, bars angled											
Tanks:	separated	202									
	non-separated	151		1							
Separator:	separated										
	non-separated										
Replicate 14, Treatment 6, 30 June, Bar spacing 16 mm, water velocity 2 m/s, bars angled											
Tanks:	separated	114									
	non-separated	52									
Separator:	separated										
	non-separated										
Replicate 15, Treatment 6, 1 July, Bar spacing 16 mm, water velocity 2 m/s, bars angled											
Tanks:	separated	59									
	non-separated	42									
Separator:	separated	2									
	non-separated										
Replicate 16, Treatment 6, 6 July, Bar spacing 16 mm, water velocity 2 m/s, bars angled											
Tanks:	separated	91		1							
	non-separated	4		1							
Separator:	separated	1									
	non-separated										
Replicate 17, Treatment 6, 8 July, Bar spacing 16 mm, water velocity 2 m/s, bars angled											
Tanks:	separated	282									
	non-separated	196									
Separator:	separated	2									
	non-separated										
Replicate 18, Treatment 6, 10 July, Bar spacing 16 mm, water velocity 2 m/s, bars angled											
Tanks:	separated	150		2							
	non-separated	89		3							
Separator:	separated	3									
	non-separated										

Appendix Table 6. Continued.

	Subyearling chinook		Yearling chinook		Steelhead		Coho		Sockeye	
Source	<180	180	<180	180	<180	180	<180	180	<180	180
Replicate 19, Treatment 6, 13 July, Bar spacing 16 mm, water velocity 2 m/s, bars angled										
Tanks: separated	318		1							
non-separated	32									
Separator: separated										
non-separated										
Replicate 20, Treatment 6, 15 July, Bar spacing 16 mm, water velocity 2 m/s, bars angled										
Tanks: separated	104		4							
non-separated	4									
Separator: separated										
non-separated										
Replicate 21, Treatment 6, 21 July, Bar spacing 16 mm, water velocity 2 m/s, bars angled										
Tanks: separated	24									
non-separated	36									
Separator: separated										
non-separated										
Replicate 22, Treatment 6, 23 July, Bar spacing 16 mm, water velocity 2 m/s, bars angled										
Tanks: separated	27									
non-separated	41									
Separator: separated	1									
non-separated										
Replicate 23, Treatment 6, 28 July, Bar spacing 16 mm, water velocity 2 m/s, bars angled										
Tanks: separated	33									
non-separated	57									
Separator: separated	2									
non-separated										
Replicate 1, Treatment 7, 29 April, Bar spacing 16 mm, water velocity 1 m/s, bars flat										
Tanks: separated			72						5	
non-separated			14	5	1	5				
Separator: separated										
non-separated										
Replicate 2, Treatment 7, 5 May, Bar spacing 16 mm, water velocity 1 m/s, bars flat										
Tanks: separated			87	1					15	
non-separated			16	1		6			2	
Separator: separated										
non-separated										

Appendix Table 6. Continued.

	Subyearling chinook		Yearling chinook		Steelhead		Coho		Sockeye	
Source	<180	180	<180	180	<180	180	<180	180	<180	180
Replicate 3, Treatment 7, 7 May, Bar spacing 16 mm, water velocity 1 m/s, bars flat										
Tanks: separated			13		2		1		9	
non-separated			5	6	1	34	3		8	
Separator: separated							1			
non-separated										
Replicate 4, Treatment 7, 12 May, Bar spacing 16 mm, water velocity 1 m/s, bars flat										
Tanks: separated			29	1					20	
non-separated			18	2		12			20	
Separator: separated										
non-separated						1				
Replicate 5, Treatment 7, 14 May, Bar spacing 16 mm, water velocity 1 m/s, bars flat										
Tanks: separated			23		1				15	
non-separated			14	5	2	28	1		3	
Separator: separated						1				
non-separated						1				
Replicate 6, Treatment 7, 18 May, Bar spacing 16 mm, water velocity 1 m/s, bars flat										
Tanks: separated			60		2				35	
non-separated			9	1	1	1			6	
Separator: separated										
non-separated										
Replicate 7, Treatment 7, 19 May, Bar spacing 16 mm, water velocity 1 m/s, bars flat										
Tanks: separated			16		1				12	
non-separated			10	4		3			4	
Separator: separated										
non-separated										
Replicate 8, Treatment 7, 21 May, Bar spacing 16 mm, water velocity 1 m/s, bars flat										
Tanks: separated	5		69		2				43	
non-separated			14	15	1	20			1	
Separator: separated										
non-separated										
Replicate 9, Treatment 7, 28 May, Bar spacing 16 mm, water velocity 1 m/s, bars flat										
Tanks: separated	50		24		4				18	
non-separated	6		5	7	2	10			2	
Separator: separated										
non-separated										

Appendix Table 6. Continued.

	Subyearling chinook		Yearling chinook		Steelhead		Coho		Sockeye	
Source	<180	180	<180	180	<180	180	<180	180	<180	180
Replicate 10, Treatment 7, 2 June, Bar spacing 16 mm, water velocity 1 m/s, bars flat										
Tanks: separated	78		20		3		14		2	
non-separated	25		8	7		19	2		2	1
Separator: separated										
non-separated										
Replicate 11, Treatment 7, 4 June, Bar spacing 16 mm, water velocity 1 m/s, bars flat										
Tanks: separated	30		23	1	1	1	10		7	
non-separated	8		10	7		19	6		1	
Separator: separated						1				
non-separated										
Replicate 12, Treatment 7, 23 June, Bar spacing 16 mm, water velocity 1 m/s, bars flat										
Tanks: separated	159		1							
non-separated	20		2	1						
Separator: separated										
non-separated										
Replicate 13, Treatment 7, 26 June, Bar spacing 16 mm, water velocity 1 m/s, bars flat										
Tanks: separated	59		1							
non-separated	2									
Separator: separated										
non-separated										
Replicate 14, Treatment 7, 29 June, Bar spacing 16 mm, water velocity 1 m/s, bars flat										
Tanks: separated	143		2							
non-separated	5									
Separator: separated										
non-separated										
Replicate 15, Treatment 7, 1 July, Bar spacing 16 mm, water velocity 1 m/s, bars flat										
Tanks: separated	77									
non-separated	4									
Separator: separated										
non-separated										
Replicate 16, Treatment 7, 6 July, Bar spacing 16 mm, water velocity 1 m/s, bars flat										
Tanks: separated	140									
non-separated	15									
Separator: separated										
non-separated										

Appendix Table 6. Continued.

	Subyearling chinook		Yearling chinook		Steelhead		Coho		Sockeye	
Source	<180	180	<180	180	<180	180	<180	180	<180	180
Replicate 17, Treatment 7, 8 July, Bar spacing 16 mm, water velocity 1 m/s, bars flat										
Tanks: separated	302									
non-separated	31									
Separator: separated	4									
non-separated										
Replicate 18, Treatment 7, 9 July, Bar spacing 16 mm, water velocity 1 m/s, bars flat										
Tanks: separated	190									
non-separated	3									
Separator: separated										
non-separated										
Replicate 19, Treatment 7, 13 July, Bar spacing 16 mm, water velocity 1 m/s, bars flat										
Tanks: separated	166									
non-separated	9									
Separator: separated										
non-separated										
Replicate 20, Treatment 7, 16 July, Bar spacing 16 mm, water velocity 1 m/s, bars flat										
Tanks: separated	96									
non-separated	17									
Separator: separated	1									
non-separated										
Replicate 21, Treatment 7, 21 July, Bar spacing 16 mm, water velocity 1 m/s, bars flat										
Tanks: separated	48									
non-separated	17									
Separator: separated	1									
non-separated										
Replicate 22, Treatment 7, 23 July, Bar spacing 16 mm, water velocity 1 m/s, bars flat										
Tanks: separated	119									
non-separated	30									
Separator: separated										
non-separated										
Replicate 23, Treatment 7, 27 July, Bar spacing 16 mm, water velocity 1 m/s, bars flat										
Tanks: separated	31									
non-separated	5									
Separator: separated										
non-separated										

Appendix Table 6. Continued.

Source	Subyearling chinook <180	Subyearling chinook 180	Yearling chinook <180	Yearling chinook 180	Steelhead <180	Steelhead 180	Coho <180	Coho 180	Sockeye <180	Sockeye 180
Replicate 1, Treatment 8, 30 April, Bar spacing 16 mm, water velocity 2 m/s, bars flat										
Tanks: separated			46		1		1			
non-separated			35	11		9			2	
Separator: separated			1							
non-separated										
Replicate 2, Treatment 8, 6 May, Bar spacing 16 mm, water velocity 2 m/s, bars flat										
Tanks: separated			20		1				31	
non-separated			11	1	2	7			13	
Separator: separated										
non-separated			2							
Replicate 3, Treatment 8, 8 May, Bar spacing 16 mm, water velocity 2 m/s, bars flat										
Tanks: separated			18			1	1		24	
non-separated			17		1	13	2		19	
Separator: separated										
non-separated				1						
Replicate 4, Treatment 8, 13 May, Bar spacing 16 mm, water velocity 2 m/s, bars flat										
Tanks: separated			19		1				8	
non-separated			26	2	2	7	1		17	
Separator: separated										
non-separated										
Replicate 5, Treatment 8, 15 May, Bar spacing 16 mm, water velocity 2 m/s, bars flat										
Tanks: separated			21		1		1		17	
non-separated			16	1	1	5	1		24	
Separator: separated										
non-separated										
Replicate 6, Treatment 8, 18 May, Bar spacing 16 mm, water velocity 2 m/s, bars flat										
Tanks: separated			79				1		45	
non-separated			24	4	3	12			10	
Separator: separated										
non-separated										
Replicate 7, Treatment 8, 20 May, Bar spacing 16 mm, water velocity 2 m/s, bars flat										
Tanks: separated	3		21				1		6	
non-separated	2		14	1	2	5	5		8	
Separator: separated										
non-separated										

Appendix Table 6. Continued.

	Subyearling chinook		Yearling chinook		Steelhead		Coho		Sockeye	
Source	<180	180	<180	180	<180	180	<180	180	<180	180
Replicate 8, Treatment 8, 25 May, Bar spacing 16 mm, water velocity 2 m/s, bars flat										
Tanks: separated	17		8				6		12	
non-separated	8		21	8	1	13	6		7	
Separator: separated										
non-separated						1				
Replicate 9, Treatment 8, 27 May, Bar spacing 16 mm, water velocity 2 m/s, bars flat										
Tanks: separated	24		8						8	
non-separated	17		17	8	1	16			8	
Separator: separated										
non-separated										
Replicate 10, Treatment 8, 1 June, Bar spacing 16 mm, water velocity 2 m/s, bars flat										
Tanks: separated	7		5		1				2	
non-separated	15		43	5	6	14	1		4	
Separator: separated							1			
non-separated										
Replicate 11, Treatment 8, 4 June, Bar spacing 16 mm, water velocity 2 m/s, bars flat										
Tanks: separated			5		3		7		5	
non-separated			27	6	8	41	34	3	24	
Separator: separated										
non-separated										
Replicate 12, Treatment 8, 22 June, Bar spacing 16 mm, water velocity 2 m/s, bars flat										
Tanks: separated	118									
non-separated	110									
Separator: separated										
non-separated										
Replicate 13, Treatment 8, 25 June, Bar spacing 16 mm, water velocity 2 m/s, bars flat										
Tanks: separated	236									
non-separated	18		2		1					
Separator: separated										
non-separated										
Replicate 14, Treatment 8, 30 June, Bar spacing 16 mm, water velocity 2 m/s, bars flat										
Tanks: separated	139		1							
non-separated	28		1							
Separator: separated										
non-separated										

Appendix Table 6. Continued.

	Subyearling chinook		Yearling chinook		Steelhead		Coho		Sockeye	
Source	<180	180	<180	180	<180	180	<180	180	<180	180
Replicate 15, Treatment 8, 2 July, Bar spacing 16 mm, water velocity 2 m/s, bars flat										
Tanks: separated	92		2	2						
non-separated	29		1							
Separator: separated										
non-separated										
Replicate 16, Treatment 8, 6 July, Bar spacing 16 mm, water velocity 2 m/s, bars flat										
Tanks: separated	123									
non-separated	32									
Separator: separated										
non-separated										
Replicate 17, Treatment 8, 8 July, Bar spacing 16 mm, water velocity 2 m/s, bars flat										
Tanks: separated	155									
non-separated	70									
Separator: separated										
non-separated										
Replicate 18, Treatment 8, 10 July, Bar spacing 16 mm, water velocity 2 m/s, bars flat										
Tanks: separated	115									
non-separated	45		1			1				
Separator: separated										
non-separated										
Replicate 19, Treatment 8, 14 July, Bar spacing 16 mm, water velocity 2 m/s, bars flat										
Tanks: separated	123		2							
non-separated	53		2							
Separator: separated	2									
non-separated										
Replicate 20, Treatment 8, 15 July, Bar spacing 16 mm, water velocity 2 m/s, bars flat										
Tanks: separated	78									
non-separated	37									
Separator: separated										
non-separated										
Replicate 21, Treatment 8, 20 July, Bar spacing 16 mm, water velocity 2 m/s, bars flat										
Tanks: separated	71									
non-separated	6									
Separator: separated										
non-separated										

Appendix Table 6. Continued.

	Subyearling chinook		Yearling chinook		Steelhead		Coho		Sockeye	
Source	<180	180	<180	180	<180	180	<180	180	<180	180
Replicate 22, Treatment 8, 23 July, Bar spacing 16 mm, water velocity 2 m/s, bars flat										
Tanks: separated	68									
non-separated	60									
Separator: separated										
non-separated										
Replicate 23, Treatment 8, 28 July, Bar spacing 16 mm, water velocity 2 m/s, bars flat										
Tanks: separated	27									
non-separated	41									
Separator: separated										
non-separated										
Replicate 1, Treatment 9, 1 May, Bar spacing 19 mm, water velocity 1 m/s, bars angled										
Tanks: separated			42	3		1			1	
non-separated			8	1					1	
Separator: separated			8							
non-separated						1				
Replicate 2, Treatment 9, 6 May, Bar spacing 19 mm, water velocity 1 m/s, bars angled										
Tanks: separated			37	1	2	2			54	
non-separated			10	1	2	5			29	
Separator: separated			11	2	2	3			1	
non-separated						2				
Replicate 3, Treatment 9, 11 May, Bar spacing 19 mm, water velocity 1 m/s, bars angled										
Tanks: separated			23	1					15	
non-separated			19	4		1			9	
Separator: separated			8							
non-separated										
Replicate 4, Treatment 9, 13 May, Bar spacing 19 mm, water velocity 1 m/s, bars angled										
Tanks: separated			18		3	12	1		19	
non-separated			23		3	35			4	
Separator: separated					1	1				
non-separated						2				
Replicate 5, Treatment 9, 15 May, Bar spacing 19 mm, water velocity 1 m/s, bars angled										
Tanks: separated			29		3	9			14	
non-separated			20	3		15			6	
Separator: separated			4	5						
non-separated						4				

Appendix Table 6. Continued.

	Subyearling chinook		Yearling chinook		Steelhead		Coho		Sockeye	
Source	<180	180	<180	180	<180	180	<180	180	<180	180
Replicate 6, Treatment 9, 19 May, Bar spacing 19 mm, water velocity 1 m/s, bars angled										
Tanks: separated			33	1	1	3	1		15	
non-separated			6	1		4			9	
Separator: separated			9						2	
non-separated						3				
Replicate 7, Treatment 9, 20 May, Bar spacing 19 mm, water velocity 1 m/s, bars angled										
Tanks: separated	4		23		1	1			11	
non-separated	1	8	3		4				2	
Separator: separated			6			1				
non-separated										
Replicate 8, Treatment 9, 25 May, Bar spacing 19 mm, water velocity 1 m/s, bars angled										
Tanks: separated	22		22		2	3			9	
non-separated	10		22	6	1	11			7	
Separator: separated	1		5			2				
non-separated						6				
Replicate 9, Treatment 9, 1 June, Bar spacing 19 mm, water velocity 1 m/s, bars angled										
Tanks: separated	126		15	1	6	3	12		13	
non-separated	213		23	4	2	7	9		24	
Separator: separated			3	1	5	6	3			
non-separated				2		9	2			
Replicate 10, Treatment 9, 3 June, Bar spacing 19 mm, water velocity 1 m/s, bars angled										
Tanks: separated	23		12		1	2	18		4	
non-separated	225		35	5	4	10	23	2	7	
Separator: separated			8		1	2	7	1		
non-separated			1	1		3		1		
Replicate 11, Treatment 9, 5 June, Bar spacing 19 mm, water velocity 1 m/s, bars angled										
Tanks: separated	12		24	1	3	3	19		1	
non-separated	8		14	5		10	10		3	
Separator: separated	7		6			1	3			
non-separated										
Replicate 12, Treatment 9, 24 June, Bar spacing 19 mm, water velocity 1 m/s, bars angled										
Tanks: separated	124		2							
non-separated	43		1							
Separator: separated	4									
non-separated										

Appendix Table 6. Continued.

		Subyearling chinook		Yearling chinook		Steelhead		Coho		Sockeye	
Source		<180	180	<180	180	<180	180	<180	180	<180	180
Replicate 13, Treatment 9, 26 June, Bar spacing 19 mm, water velocity 1 m/s, bars angled											
Tanks:	separated	54									
	non-separated	14									
Separator:	separated	2									
	non-separated										
Replicate 14, Treatment 9, 30 June, Bar spacing 19 mm, water velocity 1 m/s, bars angled											
Tanks:	separated	127		1							
	non-separated	39									
Separator:	separated										
	non-separated										
Replicate 15, Treatment 9, 2 July, Bar spacing 19 mm, water velocity 1 m/s, bars angled											
Tanks:	separated	165									
	non-separated	44									
Separator:	separated										
	non-separated										
Replicate 16, Treatment 9, 7 July, Bar spacing 19 mm, water velocity 1 m/s, bars angled											
Tanks:	separated	342		1							
	non-separated	134									
Separator:	separated	1									
	non-separated										
Replicate 17, Treatment 9, 8 July, Bar spacing 19 mm, water velocity 1 m/s, bars angled											
Tanks:	separated	233									
	non-separated	37									
Separator:	separated	6									
	non-separated										
Replicate 18, Treatment 9, 10 July, Bar spacing 19 mm, water velocity 1 m/s, bars angled											
Tanks:	separated	233		3							
	non-separated	35		1							
Separator:	separated										
	non-separated										
Replicate 19, Treatment 9, 14 July, Bar spacing 19 mm, water velocity 1 m/s, bars angled											
Tanks:	separated	166									
	non-separated	6									
Separator:	separated	43									
	non-separated										

Appendix Table 6. Continued.

	Subyearling chinook		Yearling chinook		Steelhead		Coho		Sockeye	
Source	<180	180	<180	180	<180	180	<180	180	<180	180
Replicate 20, Treatment 9, 17 July, Bar spacing 19 mm, water velocity 1 m/s, bars angled										
Tanks: separated	119									
non-separated	38									
Separator: separated	17									
non-separated										
Replicate 21, Treatment 9, 21 July, Bar spacing 19 mm, water velocity 1 m/s, bars angled										
Tanks: separated	34									
non-separated	39									
Separator: separated	8									
non-separated										
Replicate 22, Treatment 9, 24 July, Bar spacing 19 mm, water velocity 1 m/s, bars angled										
Tanks: separated	82									
non-separated	37									
Separator: separated	29									
non-separated										
Replicate 23, Treatment 9, 29 July, Bar spacing 19 mm, water velocity 1 m/s, bars angled										
Tanks: separated	82									
non-separated	76									
Separator: separated	36									
non-separated										
Replicate 1, Treatment 10, 1 May, Bar spacing 19 mm, water velocity 2 m/s, bars angled										
Tanks: separated			19	1					4	
non-separated			34			3			7	
Separator: separated										
non-separated						1				
Replicate 2, Treatment 10, 6 May, Bar spacing 19 mm, water velocity 2 m/s, bars angled										
Tanks: separated			4	1	1	9			17	
non-separated			11	6		15			11	
Separator: separated										
non-separated			3							
Replicate 2, Treatment 10, 6 May, Bar spacing 19 mm, water velocity 2 m/s, bars angled										
Tanks: separated			4	1	1	9			17	
non-separated			11	6		15			11	
Separator: separated										
non-separated			3							

Appendix Table 6. Continued.

	Subyearling chinook		Yearling chinook		Steelhead		Coho		Sockeye	
Source	<180	180	<180	180	<180	180	<180	180	<180	180
Replicate 3, Treatment 10, 11 May, Bar spacing 19 mm, water velocity 2 m/s, bars angled										
Tanks: separated			11	1		10	3		13	
non-separated			19	4		10	3		18	
Separator: separated						2				
non-separated						2	1		1	
Replicate 4, Treatment 10, 13 may, Bar spacing 19 mm, water velocity 2 m/s, bars angled										
Tanks: separated			21	1	1				4	
non-separated			31	8	3	25	1		15	
Separator: separated						1				
non-separated										
Replicate 5, Treatment 10, 15 May, Bar spacing 19 mm, water velocity 2 m/s, bars angled										
Tanks: separated			21		2	3			21	
non-separated			51	2	2	12			13	
Separator: separated			1				1			
non-separated						1				
Replicate 6, Treatment 10, 19 May, Bar spacing 19 mm, water velocity 2 m/s, bars angled										
Tanks: separated	2		22		1		5		10	
non-separated	5		21	2		2	5		6	
Separator: separated										
non-separated				1		5				
Replicate 7, Treatment 10, 21 May, Bar spacing 19 mm, water velocity 2 m/s, bars angled										
Tanks: separated	3		36	2	2		4		29	
non-separated			35	10		6	11		25	
Separator: separated			2							
non-separated										
Replicate 8, Treatment 10, 26 May, Bar spacing 19 mm, water velocity 2 m/s, bars angled										
Tanks: separated	31		16	2					5	
non-separated	24		25	8		1	2		3	
Separator: separated										
non-separated										
Replicate 9, Treatment 10, 29 May, Bar spacing 19 mm, water velocity 2 m/s, bars angled										
Tanks: separated	65		11	4	1	2	4		18	
non-separated	54		23	11	1	8	6		28	
Separator: separated										
non-separated										

Appendix Table 6. Continued.

		Subyearling chinook		Yearling chinook		Steelhead		Coho		Sockeye	
Source		<180	180	<180	180	<180	180	<180	180	<180	180
Replicate 10, Treatment 10, 2 June, Bar spacing 19 mm, water velocity 2 m/s, bars angled											
Tanks:	separated	194		9	1	4		7	1	1	
	non-separated	327		25	4	5	14	18		28	
Separator:	separated					1					
	non-separated					3					
Replicate 11, Treatment 10, 5 June, Bar spacing 19 mm, water velocity 2 m/s, bars angled											
Tanks:	separated			5		1		8		1	
	non-separated			25	2	2	12	24	1	4	
Separator:	separated										
	non-separated							1			
Replicate 12, Treatment 10, 23 June, Bar spacing 19 mm, water velocity 2 m/s, bars angled											
Tanks:	separated	141									
	non-separated	182									
Separator:	separated										
	non-separated										
Replicate 13, Treatment 10, 26 June, Bar spacing 19 mm, water velocity 2 m/s, bars angled											
Tanks:	separated	75									
	non-separated	32									
Separator:	separated										
	non-separated										
Replicate 14, Treatment 10, 30 June, Bar spacing 19 mm, water velocity 2 m/s, bars angled											
Tanks:	separated	197									
	non-separated	5									
Separator:	separated										
	non-separated										
Replicate 15, Treatment 10, 2 July, Bar spacing 19 mm, water velocity 2 m/s, bars angled											
Tanks:	separated	526		2							
	non-separated	56			2						
Separator:	separated										
	non-separated										
Replicate 16, Treatment 10, 7 July, Bar spacing 19 mm, water velocity 2 m/s, bars angled											
Tanks:	separated	2666									
	non-separated	106									
Separator:	separated										
	non-separated										

Appendix Table 6. Continued.

		Subyearling chinook		Yearling chinook		Steelhead		Coho		Sockeye	
Source		<180	180	<180	180	<180	180	<180	180	<180	180
Replicate 17, Treatment 10, 8 July, Bar spacing 19 mm, water velocity 2 m/s, bars angled											
Tanks:	separated	186									
	non-separated	221									
Separator:	separated	2									
	non-separated										
Replicate 18, Treatment 10, 10 July, Bar spacing 19 mm, water velocity 2 m/s, bars angled											
Tanks:	separated	127		1							
	non-separated	9									
Separator:	separated										
	non-separated										
Replicate 19, Treatment 10, 14 July, Bar spacing 19 mm, water velocity 2 m/s, bars angled											
Tanks:	separated	128		1							
	non-separated	92									
Separator:	separated	1									
	non-separated										
Replicate 20, Treatment 10, 17 July, Bar spacing 19 mm, water velocity 2 m/s, bars angled											
Tanks:	separated	83									
	non-separated	111					1				
Separator:	separated	4									
	non-separated										
Replicate 21, Treatment 10, 22 July, Bar spacing 19 mm, water velocity 2 m/s, bars angled											
Tanks:	separated	11									
	non-separated	61									
Separator:	separated	3									
	non-separated										
Replicate 22, Treatment 10, 24 July, Bar spacing 19 mm, water velocity 2 m/s, bars angled											
Tanks:	separated	91									
	non-separated	77			1						
Separator:	separated	4									
	non-separated										
Replicate 23, Treatment 10, 30 July, Bar spacing 19 mm, water velocity 2 m/s, bars angled											
Tanks:	separated	68									
	non-separated	90									
Separator:	separated	5									
	non-separated										

Appendix Table 6. Continued.

	Subyearling chinook		Yearling chinook		Steelhead		Coho		Sockeye	
Source	<180	180	<180	180	<180	180	<180	180	<180	180
Replicate 1, Treatment 11, 1 May, Bar spacing 19 mm, water velocity 1 m/s, bars flat										
Tanks: separated			51		1	1			3	
non-separated			4	1	2	4			2	
Separator: separated			2							
non-separated						1				
Replicate 2, Treatment 11, 6 May, Bar spacing 19 mm, water velocity 1 m/s, bars flat										
Tanks: separated			38						38	
non-separated			3			1			6	
Separator: separated										
non-separated										
Replicate 3, Treatment 11, 8 May, Bar spacing 19 mm, water velocity 1 m/s, bars flat										
Tanks: separated			49	2	2	11	1		32	
non-separated			9	1		12			4	
Separator: separated					1					
non-separated										
Replicate 4, Treatment 11, 13 May, Bar spacing 19 mm, water velocity 1 m/s, bars flat										
Tanks: separated			21	2	1	4			3	
non-separated			2	2		16			1	
Separator: separated										
non-separated										
Replicate 5, Treatment 11, 18 May, Bar spacing 19 mm, water velocity 1 m/s, bars flat										
Tanks: separated	8		25			5	10		50	
non-separated			4	2		1	1		4	
Separator: separated										
non-separated										
Replicate 6, Treatment 11, 19 May, Bar spacing 19 mm, water velocity 1 m/s, bars flat										
Tanks: separated		51	1		2				20	
non-separated		12			4				1	
Separator: separated		1			2					
non-separated										
Replicate 7, Treatment 11, 21 May, Bar spacing 19 mm, water velocity 1 m/s, bars flat										
Tanks: separated	4		107	1	2	3	1		60	
non-separated			20	2		1			4	
Separator: separated										
non-separated										

Appendix Table 6. Continued.

	Subyearling chinook		Yearling chinook		Steelhead		Coho		Sockeye	
Source	<180	180	<180	180	<180	180	<180	180	<180	180
Replicate 8, Treatment 11, 26 May, Bar spacing 19 mm, water velocity 1 m/s, bars flat										
Tanks: separated	33		23	3	2	4	9	1	18	
non-separated	5		3	2		7	1		1	
Separator: separated							1			
non-separated									1	
Replicate 9, Treatment 11, 1 June, Bar spacing 19 mm, water velocity 1 m/s, bars flat										
Tanks: separated	45		31	1	3	4	4		20	
non-separated	20		1	3		11	9		11	
Separator: separated										
non-separated										
Replicate 10, Treatment 11, 2 June, Bar spacing 19 mm, water velocity 1 m/s, bars flat										
Tanks: separated	513		20	2	3	2	24		23	
non-separated	282		7	1		9	8		20	
Separator: separated						1				
non-separated										
Replicate 11, Treatment 11, 5 June, Bar spacing 19 mm, water velocity 1 m/s, bars flat										
Tanks: separated	2		24			5	5		3	
non-separated			11		1	11	3		5	
Separator: separated			1	1		1	7		1	
non-separated										
Replicate 12, Treatment 11, 23 June, Bar spacing 19 mm, water velocity 1 m/s, bars flat										
Tanks: separated	182		2							
non-separated	4									
Separator: separated	1									
non-separated										
Replicate 13, Treatment 11, 26 June, Bar spacing 19 mm, water velocity 1 m/s, bars flat										
Tanks: separated	115									
non-separated	4									
Separator: separated										
non-separated										
Replicate 14, Treatment 11, 30 June, Bar spacing 19 mm, water velocity 1 m/s, bars flat										
Tanks: separated	162		4							
non-separated	7									
Separator: separated										
non-separated										

Appendix Table 6. Continued.

	Subyearling chinook		Yearling chinook		Steelhead		Coho		Sockeye	
Source	<180	180	<180	180	<180	180	<180	180	<180	180
Replicate 15, Treatment 11, 2 July, Bar spacing 19 mm, water velocity 1 m/s, bars flat										
Tanks: separated	2093		4							
non-separated	61									
Separator: separated	3									
non-separated										
Replicate 16, Treatment 11, 7 July, Bar spacing 19 mm, water velocity 1 m/s, bars flat										
Tanks: separated	491		1							
non-separated	12									
Separator: separated	10									
non-separated										
Replicate 17, Treatment 11, 8 July, Bar spacing 19 mm, water velocity 1 m/s, bars flat										
Tanks: separated	2233									
non-separated	4									
Separator: separated	2									
non-separated										
Replicate 18, Treatment 11, 10 July, Bar spacing 19 mm, water velocity 1 m/s, bars flat										
Tanks: separated	211									
non-separated	15									
Separator: separated	2									
non-separated										
Replicate 19, Treatment 11, 14 July, Bar spacing 19 mm, water velocity 1 m/s, bars flat										
Tanks: separated	185									
non-separated	24		2							
Separator: separated	4									
non-separated										
Replicate 20, Treatment 11, 17 July, Bar spacing 19 mm, water velocity 1 m/s, bars flat										
Tanks: separated	151									
non-separated	21									
Separator: separated	2									
non-separated										
Replicate 21, Treatment 11, 22 July, Bar spacing 19 mm, water velocity 1 m/s, bars flat										
Tanks: separated	51									
non-separated	13									
Separator: separated	1									
non-separated										

Appendix Table 6. Continued.

	Subyearling chinook		Yearling chinook		Steelhead		Coho		Sockeye	
Source	<180	180	<180	180	<180	180	<180	180	<180	180
Replicate 22, Treatment 11, 24 July, Bar spacing 19 mm, water velocity 1 m/s, bars flat										
Tanks: separated	107									
non-separated	18									
Separator: separated	4									
non-separated										
Replicate 23, Treatment 11, 30 July, Bar spacing 19 mm, water velocity 1 m/s, bars flat										
Tanks: separated	183									
non-separated	74									
Separator: separated										
non-separated										
Replicate 1, Treatment 12, 30 April, Bar spacing 19 mm, water velocity 2 m/s, bars flat										
Tanks: separated			16	1		1			2	
non-separated				10		1			2	
Separator: separated										
non-separated										
Replicate 2, Treatment 12, 6 May, Bar spacing 19 mm, water velocity 2 m/s, bars flat										
Tanks: separated			23		2	7			15	
non-separated			10			16			3	
Separator: separated										
non-separated										
Replicate 3, Treatment 12, 11 May, Bar spacing 19 mm, water velocity 2 m/s, bars flat										
Tanks: separated			41			2			35	
non-separated			7	1		3			9	
Separator: separated			1							
non-separated										
Replicate 4, Treatment 12, 14 May, Bar spacing 19 mm, water velocity 2 m/s, bars flat										
Tanks: separated			12			1	1		17	
non-separated			10	1		5	3		39	
Separator: separated										
non-separated										
Replicate 5, Treatment 12, 15 May, Bar spacing 19 mm, water velocity 2 m/s, bars flat										
Tanks: separated			23	1	1	1			14	
non-separated			16	1		1	1		27	
Separator: separated										
non-separated										

Appendix Table 6. Continued.

	Subyearling chinook		Yearling chinook		Steelhead		Coho		Sockeye	
Source	<180	180	<180	180	<180	180	<180	180	<180	180
Replicate 6, Treatment 12, 18 May, Bar spacing 19 mm, water velocity 2 m/s, bars flat										
Tanks: separated			74		2	7			13	
non-separated			31	4	3	16	1			
Separator: separated										
non-separated										
Replicate 7, Treatment 12, 20 May, Bar spacing 19 mm, water velocity 2 m/s, bars flat										
Tanks: separated			36			7			23	
non-separated	1		29	3	1	6			9	
Separator: separated										
non-separated										
Replicate 8, Treatment 12, 26 May, Bar spacing 19 mm, water velocity 2 m/s, bars flat										
Tanks: separated	25		22	5	1	2			22	
non-separated	11		25	10	2	4			6	
Separator: separated										
non-separated										
Replicate 9, Treatment 12, 29 May, Bar spacing 19 mm, water velocity 2 m/s, bars flat										
Tanks: separated	28		3	2	7	4			2	
non-separated	27		19	19	5	12			16	
Separator: separated										
non-separated										
Replicate 10, Treatment 12, 2 June, Bar spacing 19 mm, water velocity 2 m/s, bars flat										
Tanks: separated	306		9	2	1	1	16	1	2	
non-separated	291		16	3		7	25	2	1	
Separator: separated										
non-separated										
Replicate 11, Treatment 12, 4 June, Bar spacing 19 mm, water velocity 2 m/s, bars flat										
Tanks: separated			13		5	6	16		2	
non-separated			23	3	3	37	30	21		
Separator: separated										
non-separated										
Replicate 12, Treatment 12, 24 June, Bar spacing 19 mm, water velocity 2 m/s, bars flat										
Tanks: separated	145									
non-separated	33									
Separator: separated										
non-separated										

Appendix Table 6. Continued.

		Subyearling chinook		Yearling chinook		Steelhead		Coho		Sockeye	
Source		<180	180	<180	180	<180	180	<180	180	<180	180
Replicate 13, Treatment 12, 26 July, Bar spacing 19 mm, water velocity 2 m/s, bars flat											
Tanks:	separated	113									
	non-separated	2									
Separator:	separated										
	non-separated										
Replicate 14, Treatment 12, 30 June, Bar spacing 19 mm, water velocity 2 m/s, bars flat											
Tanks:	separated	186		1							
	non-separated	2									
Separator:	separated										
	non-separated										
Replicate 15, Treatment 12, 2 July, Bar spacing 19 mm, water velocity 2 m/s, bars flat											
Tanks:	separated	1170		2							
	non-separated	226			1						
Separator:	separated										
	non-separated										
Replicate 16, Treatment 12, 6 July, Bar spacing 19 mm, water velocity 2 m/s, bars flat											
Tanks:	separated	123									
	non-separated	74		1							
Separator:	separated										
	non-separated										
Replicate 17, Treatment 12, 9 July, Bar spacing 19 mm, water velocity 2 m/s, bars flat											
Tanks:	separated	151		6							
	non-separated	32		1							
Separator:	separated	1									
	non-separated										
Replicate 18, Treatment 12, 10 July, Bar spacing 19 mm, water velocity 2 m/s, bars flat											
Tanks:	separated	439		3							
	non-separated	104		3							
Separator:	separated										
	non-separated										
Replicate 19, Treatment 12, 14 July, Bar spacing 19 mm, water velocity 2 m/s, bars flat											
Tanks:	separated	166									
	non-separated	58									
Separator:	separated			1							
	non-separated										

Appendix Table 6. Continued.

		Subyearling chinook		Yearling chinook		Steelhead		Coho		Sockeye	
Source		<180	180	<180	180	<180	180	<180	180	<180	180
Replicate 20, Treatment 12, 17 July, Bar spacing 19 mm, water velocity 2 m/s, bars flat											
Tanks:	separated	133									
	non-separated	17									
Separator:	separated										
	non-separated										
Replicate 21, Treatment 12, 22 July, Bar spacing 19 mm, water velocity 2 m/s, bars flat											
Tanks:	separated	54									
	non-separated	27									
Separator:	separated										
	non-separated										
Replicate 22, Treatment 12, 24 July, Bar spacing 19 mm, water velocity 2 m/s, bars flat											
Tanks:	separated	112									
	non-separated	47									
Separator:	separated										
	non-separated										
Replicate 23, Treatment 12, 29 July, Bar spacing 19 mm, water velocity 2 m/s, bars flat											
Tanks:	separated	167									
	non-separated	132									
Separator:	separated	1									
	non-separated										

Appendix Table 7. Analyses of covariance results among mean separation efficiency values obtained for treatments involving separation-bar spacing (gap), water velocity, and separation-bar array angle during biological design criteria studies using an evaluation high-velocity flume wet separator at McNary Dam, 1998. Sample date (date) was included as a covariate where the analysis was not seriously affected by combining samples from successive replicates. = 0.05, † = significant difference among means. Where analysis involved more than two treatments, an association table showing the highest differences between paired treatment means is included. Association tables follow Fishers protected least significant difference, * = significant differences between paired means.

Species	Length group	Analysis source	F	df	P
Yearling chinook salmon	<180 mm	date	26.73	1	0.000 †
		gap	33.94	2	0.000 †
		velocity	29.48	1	0.000 †
		angle	21.11	1	0.000 †
		gap vs. velocity	3.42	2	0.037 †
		gap vs. angle	3.43	2	0.037 †
		velocity vs. angle	0.84	1	0.361
		gap vs. velocity vs. angle	1.08	2	0.345

Separation-bar gap vs. water velocity

Gap (m), velocity (m/s)	Mean	SE		Association table				
				13,1	13,2	16,1	16,2	19,1
13,1	26.15	5.318						
13,2	21.37	2.642	13,2					
16,1	67.39	3.037	16,1	*	*			
16,2	47.11	3.117	16,2	*	*	*		
19,1	76.65	3.138	19,1	*	*	*	*	
19,2	49.08	3.418	19,2	*	*	*		*

Separation-bar gap (mm) vs. separation-bar array angle (0 = flat, a = angled)

Gap (m), angle (0 = flat, a = angled)	Mean	SE		Association table				
				13,0	13,a	16,0	16,a	19,0
13,0	32.22	5.312						
13,a	15.31	5.647	13,a	*				
16,0	60.28	3.039	16,0	*	*			
16,a	54.52	3.115	16,a	*	*			
19,0	73.9	3.414	19,0	*	*	*	*	
19,a	51.82	3.418	19,a	*	*			*

Appendix Table 7. Continued.

Species	Length group	Analysis source	F	df	P
Yearling chinook salmon	total catch	date	24.44	1	0.000 †
		gap	40.08	2	0.000 †
		velocity	31.76	1	0.000 †
		angle	24.72	1	0.000 †
		gap vs. velocity	3.04	2	0.530
		gap vs. angle	3.63	2	0.030 †
		velocity vs. angle	0.69	1	0.410
		gap vs. velocity vs. angle	0.82	2	0.444

Separation-bar gap vs. separation-bar array angle

Gap (mm), angle (0 = flat, a = angled)	Mean	SE	Association table					
				13,0	13,a	16,0	16,a	19,0
13,0	37.16	4.612						
13,a	20.97	4.910	13,a	*				
16,0	64.84	2.656	16,0	*	*			
16,a	59.16	2.654	16,a	*	*			
19,0	74.26	2.671	19,0	*	*	*	*	
19,a	54.53	2.672	19,a	*	*	*		*

Appendix Table 7. Continued.

Species	Length group	Analysis source	F	df	P
Steelhead	180	gap	77.02	2	0.000 †
		velocity	0.80	1	0.379
		angle	4.10	1	0.053
		gap vs. velocity	2.95	2	0.070
		gap vs. angle	3.61	2	0.041 †
		velocity vs. angle	0.99	1	0.328
		gap vs. velocity vs. angle	4.40	2	0.892

Separation-bar gap vs. separation-bar array angle

Gap (mm), angle (0 = flat, a = angled)	Mean	SE		Association table				
				13,0	13,a	16,0	16,a	19,0
13,0	90.25	4.385						
13,a	100	4.385	13,a					
16,0	98.98	2.193	16,0					
16,a	96.39	2.193	16,a					
19,0	67.69	2.193	19,0	*	*	*	*	
19,a	75.84	2.08	19,a	*	*	*	*	*

Appendix Table 7. Continued.

Species	Length group	Analysis source	F	df	P
Steelhead	total catch	gap	4.12	2	0.027 †
		velocity	0.10	1	0.756
		angle	1.46	1	0.237
		gap vs. velocity	1.95	2	0.162
		gap vs. angle	0.49	2	0.620
		velocity vs. angle	3.32	1	0.079
		gap vs. velocity vs. angle	2.31	2	0.118

Separation-bar gap (mm)

Gap (mm)	Mean	SE	Association table		
13	28.4	9.846		13	16
16	56.2	4.583	16	*	
19	42.99	4.798	19		

Appendix Table 7. Continued.

Species	Length group	Analysis source	F	df	P
Sockeye salmon	<180 mm	gap	0.27	2	0.767
		velocity	4.63	1	0.037 †
		angle	2.14	1	0.151
		gap vs. velocity	0.91	2	0.409
		gap vs. angle	0.53	2	0.590
		velocity vs. angle	1.62	1	0.210
		gap vs. velocity vs. angle	0.18	2	0.836

Appendix Table 7. Continued.

Species	Length group	Analysis source	F	df	P
Total salmonid species (spring outmigration)	<180	date	10.66	1	0.002 †
		gap	19.28	2	0.000 †
		velocity	31.90	1	0.000 †
		angle	31.05	1	0.000 †
		gap vs. velocity	2.93	2	0.059
		gap vs. angle	1.50	2	0.229
		velocity vs. angle	0.33	1	0.565
		gap vs. velocity vs. angle	3.99	2	0.022 †

Separation-bar gap vs. water velocity vs. separation-bar array angle

Gap (mm), velocity (m/s), angle (0 = flat, a = angled)	Mean	SE
13,1,0	46.22	6.446
13,1,a	35.59	6.452
13,2,0	44.27	6.446
13,2,a	25.55	7.344
16,1,0	75.14	3.795
16,1,a	52.16	3.795
16,2,0	46.10	3.799
16,2,a	45.77	3.795
19,1,0	84.48	3.810
19,1,a	66.02	3.809
19,2,0	62.76	3.804
19,2,a	39.52	3.807

Association table

	13,1,0	13,1,a	13,2,0	13,2,a	16,1,0	16,1,a	16,2,0	16,2,a	19,1,0	19,1,a	19,2,0
13,1,a											
13,2,0											
13,2,a	*										
16,1,0	*	* *		*							
16,1,a		*		* *							
16,2,0				**							
16,2,a				**							
19,1,0	*	* *		*		* *		*			
19,1,a	*	* *		*		* *		* *			
19,2,0	*	* *		* *			*	* *			
19,2,a					*	*			*	*	*

Appendix Table 7. Continued.

Species	Length group	Analysis source	F	df	P
Total salmonid species (spring outmigration)	180	gap	26.79	2	0.000 †
		velocity	1.20	1	0.281
		angle	0.80	1	0.377
		gap vs. velocity	1.57	2	0.223
		gap vs. angle	2.74	2	0.078
		velocity vs. angle	0.34	1	0.564
		gap vs. velocity vs. angle	0.35	2	0.704

Separation-bar gap

Gap (mm)	Mean	SE	Association table		
13	94.03	5.379		13	16
16	94.79	2.533	16		
19	71.36	2.344	19	0	0

Appendix Table 7. Continued.

Species	Length group	Analysis source	F	df	P
Total salmonid species (spring outmigration)	total catch	date	4.06	1	0.047 †
		gap	14.90	2	0.000 †
		velocity	29.48	1	0.000 †
		angle	26.95	1	0.000 †
		gap vs. velocity	1.63	2	0.201
		gap vs. angle	0.29	2	0.746
		velocity vs. angle	0.53	1	0.470
		gap vs. velocity vs. angle	3.69	2	0.029 †

Separation-bar gap vs. water velocity vs. separation-bar array angle

Gap (mm), veolcity (m/s), angle (0 = flat, a = angled)	Mean	SE
13,1,0	53.33	5.627
13,1,a	44.75	5.633
13,2,0	49.98	5.627
13,2,a	34	6.411
16,1,0	80.88	3.313
16,1,a	59.54	3.314
16,2,0	56.49	3.316
16,2,a	55.29	3.313
19,1,0	80.95	3.326
19,1,a	67.15	3.325
19,2,0	63.2	3.321
19,2,a	47.36	3.324

Association table

	13,1,0	13,1,a	13,2,0	13,2,a	16,1,0	16,1,a	16,2,0	16,2,a	19,1,0	19,1,a	19,2,0
13,1,a											
13,2,0											
13,2,a	*										
16,1,0	*	*	*	*							
16,1,a		*		*	*						
16,2,0				*	*						
16,2,a				*	*						
19,1,0	*	*	*	*		*	*	*			
19,1,a	*	*	*	*	*		*	*	*		
19,2,0		*	*	*	*				*		
19,2,a					*	*			*	*	*

Appendix Table 7. Continued.

Species	Length group	Analysis source	F	df	P
Subyearling chinook salmon	<180	date	37.71	1	0.000 †
		gap	2.31	2	0.104
		velocity	30.40	1	0.000 †
		angle	22.25	1	0.000 †
		gap vs. velocity	0.10	2	0.909
		gap vs. angle	1.10	2	0.338
		velocity vs. angle	0.55	1	0.459
		gap vs. velocity vs. angle	0.52	2	0.597

Appendix Table 8. Analyses of covariance results among mean separator exit efficiency values obtained for treatments involving separation-bar spacing (gap), water velocity, and separation-bar array angle during biological design criteria studies using an evaluation high-velocity flume wet separator at McNary Dam, 1998. Sample date (date) was included as a covariate where the analysis was not seriously affected by combining samples from successive replicates. A significant difference (= 0.05) among means is indicated by a cross (†). Where analysis involved more than two treatments, the highest level of interaction is further denoted by a letter referring to an association table clarifying differences between paired treatment means. Association tables follow Fishers Protected Least Significant Difference procedure results, with asteristics indicating differences between paired means.

Species	Length group	Analysis source	F	df	P
Yearling	<180	date	0.17	1	0.685
chinook salmon		gap	0.67	2	0.515
		velocity	27.90	1	0.000 †
		angle	29.70	1	0.000 †
		gap vs. velocity	0.04	2	0.964
		gap vs. angle	0.54	2	0.585
		velocity vs. angle	24.20	1	0.000 †
		gap vs. velocity vs. angle	0.32	2	0.728

Water velocity vs. separation-bar array angle

Velocity (m/s), angle (0 = flat, a = angled)	Mean	SE	Association table			
				1.0	1,a	2,0
1,0	99.66	1.005				
1,a	88.98	0.996	1,a	0		
2,0	99.74	1.03	2,0		*	
2,a	99.17	1.099	2,a		*	

Appendix Table 8. Continued.

Species	Length group	Analysis source	F	df	P
Yearling	total catch	date	0.08	1	0.771
chinook salmon		gap	0.97	2	0.385
		velocity	28.71	1	0.000 †
		angle	35.61	1	0.000 †
		gap vs. velocity	0.12	2	0.884
		gap vs. angle	0.71	2	0.495
		velocity vs. angle	27.87	1	0.000 †
		gap vs. velocity vs. angle	0.77	2	0.467

Water velocity vs. separation-bar array angle

Velocity (m/s), angle (0 = flat, a = angled)	Mean	SE
1.0	99.6	0.949
1,a	88.45	0.95
2,0	99.67	0.949
2,a	98.99	1.124

Association table

	1.0	1,a	2,0
1,a	0		
2,0		*	
2,a		*	

Appendix Table 8. Continued.

Species	Length group	Analysis source	F	df	P
Steelhead	180	gap	0.43	2	0.653
		velocity	6.00	1	0.021 †
		angle	15.95	1	0.000 †
		gap vs. velocity	0.25	2	0.783
		gap vs. angle	0.20	2	0.818
		velocity vs. angle	4.55	1	0.043 †
		gap vs. velocity vs. angle	0.43	2	0.658

Water velocity vs. separation-bar array angle

Velocity (m/s), angle (0 = flat, a = angled)	Mean	SE
1.0	96.99	4.848
1,a	67.42	4.682
2,0	98.53	4.848
2,a	89.54	4.981

Association table

	1.0	1,a	2,0
1,a	0		
2,0		*	
2,a		*	

Appendix Table 8. Continued.

Species	Length group	Analysis source	F	df	P
Steelhead	total catch	gap	0.38	2	0.684
		velocity	6.53	1	0.016 †
		angle	19.32	1	0.000 †
		gap vs. velocity	0.34	2	0.716
		gap vs. angle	0.20	2	0.817
		velocity vs. angle	4.80	1	0.037 †
		gap vs. velocity vs. angle	0.79	2	0.463

Water velocity vs. separation-bar array angle

Velocity (m/s), angle (0 = flat, a = angled)	Mean	SE	Association table			
				1.0	1,a	2,0
1.0	97.23	4.269				
1,a	69.55	4.075	1,a	*		
2,0	98.76	4.197	2,0		*	
2,a	89.49	4.269	2,a		*	

Appendix Table 8. Continued.

Species	Length group	Analysis source	F	df	P
Sockeye salmon	<180 mm	gap	0.67	2	0.517
		velocity	2.62	1	0.113
		angle	2.78	1	0.103
		gap vs. velocity	0.25	2	0.780
		gap vs. angle	0.56	2	0.575
		velocity vs. angle	0.77	1	0.358
		gap vs. velocity vs. angle	0.33	2	0.723

Appendix Table 8. Continued.

Species	Length group	Analysis source	F	df	P
Total salmonid species (spring migration)	<180	date	1.75	1	0.190
		gap	2.19	2	0.118
		velocity	30.19	1	0.000 †
		angle	30.01	1	0.000 †
		gap vs. velocity	3.81	2	0.026 †
		gap vs. angle	6.55	2	0.002 †
		velocity vs. angle	31.33	1	0.000 †
		gap vs. velocity vs. angle	3.16	2	0.047 †

Separation-bar gap vs. water velocity vs. separation-bar array angle

Gap (mm), velocity (m/s), angle (0 = flat, a = angled)	Mean	SE
13,1,0	99.16	1.978
13,1,a	93.27	1.979
13,2,0	99.43	1.978
13,2,a	99.56	2.253
16,1,0	99.53	1.164
16,1,a	83.82	1.165
16,2,0	99.6	1.166
16,2,a	98.69	1.164
19,1,0	98	1.169
19,1,a	91.13	1.169
19,2,0	97.42	1.167
19,2,a	85.5	1.168

Association table

	13,1,0	13,1,a	13,2,0	13,2,a	16,1,0	16,1,a	16,2,0	16,2,a	19,1,0	19,1,a	19,2,0
13,1,a	*										
13,2,0		*									
13,2,a		*									
16,1,0		*									
16,1,a	*	*	*	*	*						
16,2,0		*				*					
16,2,a		*				*					
19,1,0		*				*					
19,1,a	*		*	*	*	*	*	*			
19,2,0						*				*	
19,2,a	*	*	*	*	*		*	*	*	*	*

Appendix Table 8. Continued.

Species	Length group	Analysis source	F	df	P
Total salmonid species (spring outmigration)	180	gap	0.27	2	0.762
		velocity	7.40	1	0.010 †
		angle	14.93	1	0.000 †
		gap vs. velocity	0.10	2	0.908
		gap vs. angle	0.10	2	0.903
		velocity vs. angle	5.67	1	0.023 †
		gap vs. velocity vs. angle	0.29	2	0.749

Water velocity vs. separation-bar array angle

velocity (m/s), angle (0 = flat, a = angled)	Mean	SE	Association table			
				1,0	1,a	2,0
1,0	97.48	4.046				
1,a	72.82	3.880	1,a	*		
2,0	98.83	3.975	1,0		*	
2,a	92.97	3.893	2,a		0	

Appendix Table 8. Continued.

Species	Length group	Analysis source	F	df	P
Total salmonid species (spring outmigration)	total catch	date	1.68	1	0.199
		gap	1.26	2	0.289
		velocity	37.03	1	0.000 †
		angle	44.80	1	0.000 †
		gap vs. velocity	3.45	2	0.036 †
		gap vs. angle	4.58	2	0.013 †
		velocity vs. angle	36.44	1	0.000 †
		gap vs. velocity vs. angle	3.30	2	0.042 †

Separation-bar gap vs. water velocity vs. separation-bar array angle

Gap (mm), velocity (m/s), angle (0 = flat, a = angled)	Mean	SE
13,1,0	98.76	2.166
13,1,a	90.55	2.169
13,2,0	99.14	2.166
13,2,a	98.23	2.468
16,1,0	99.45	1.276
16,1,a	80.92	1.276
16,2,0	99.49	1.279
16,2,a	98.47	1.276
19,1,0	97.84	1.281
19,1,a	88.36	1.28
19,2,0	97.56	1.279
19,2,a	97.62	1.28

Association table

	13,1,0	13,1,a	13,2,0	13,2,a	16,1,0	16,1,a	16,2,0	16,2,a	19,1,0	19,1,a	19,2,0
13,1,a	*										
13,2,0		*									
13,2,a		*									
16,1,0		*									
16,1,a	*	*	*	*	*						
16,2,0		*				*					
16,2,a		*				*					
19,1,0		*				*					
19,1,a	*		*	*	*	*	*	*	*		
19,2,0		*				*				*	
19,2,a		*				*				*	

Appendix Table 8. Continued.

Species	Length group	Analysis source	F	df	P
Subyearling chinook salmon	<180	date	24.84	1	0.000 †
		gap	0.46	2	0.630
		velocity	27.49	1	0.000 †
		angle	30.10	1	0.000 †
		gap vs. velocity	0.16	2	0.885
		gap vs. angle	0.03	2	0.973
		velocity vs. angle	18.20	1	0.000 †
		gap vs. velocity vs. angle	0.00	2	0.998

Water velocity vs. separation-bar array angle

Velocity (m/s), angle (0 = flat, a = angled)	Mean	SE	Association table			
1,0	99.2	0.6867		1,0	1,a	2,0
1,a	92.54	0.6867	1,a	0		
2,0	99.91	0.6867	1,0		*	
2,a	99.07	0.6867	2,a		0	

Appendix Table 9. Analyses of covariance results among mean descaling values obtained for treatments involving separation-bar spacing (gap), water velocity, and separation-bar array angle during biological design criteria studies using an evaluation high-velocity flume wet separator at McNary Dam, 1998. Sample date f (date) was included as a covariate where the analysis was not seriously affected by combining samples from successive replicates. A significant difference (a = 0.05) among means is indicated by a cross (†).

Species	Length group	Analysis source	F	df	P
Yearling chinook salmon	<180	date	7.03	1	1.010 †
		gap	2.03	2	0.138
		velocity	0.47	1	0.495
		angle	0.54	1	0.466
		gap vs. velocity	0.84	2	0.437
		gap vs. angle	0.35	2	0.708
		velocity vs. angle	0.19	1	0.667
		gap vs. velocity vs. angle	0.37	2	0.693
Yearling chinook salmon	total catch	date	7.97	1	0.006 †
		gap	2.36	2	0.100
		velocity	0.52	1	0.473
		angle	0.28	1	0.599
		gap vs. velocity	0.59	2	0.558
		gap vs. angle	0.40	2	0.673
		velocity vs. angle	0.07	1	0.796
		gap vs. velocity vs. angle	0.47	2	0.627
Steelhead	180	gap	0.94	2	0.404
		velocity	0.12	1	0.734
		angle	0.52	1	0.477
		gap vs. velocity	2.30	2	0.120
		gap vs. angle	0.17	2	0.848
		velocity vs. angle	0.63	1	0.434
		gap vs. velocity vs. angle	0.55	2	0.584
Steelhead	total catch	gap	0.96	2	0.395
		velocity	0.31	1	0.582
		angle	0.25	1	0.623
		gap vs. velocity	0.58	2	0.564
		gap vs. angle	0.19	2	0.827
		velocity vs. angle	0.05	1	0.831
		gap vs. velocity vs. angle	0.65	2	0.532

Appendix Table 9. Continued.

Species	Length group	Analysis source	F	df	P
Sockeye salmon	<180 mm	gap	0.49	2	0.616
		velocity	0.87	1	0.357
		angle	0.08	1	0.783
		gap vs. velocity	0.06	2	0.938
		gap vs. angle	0.53	2	0.594
		velocity vs. angle	0.83	1	0.366
		gap vs. velocity vs. angle	0.01	2	0.993
Total salmonid species (spring outmigration)	<180	date	1.93	1	0.168
		gap	1.15	2	0.322
		velocity	1.41	1	0.238
		angle	0.03	1	0.872
		gap vs. velocity	0.64	2	0.527
		gap vs. angle	0.21	2	0.812
		velocity vs. angle	1.65	1	0.202
		gap vs. velocity vs. angle	0.04	2	0.964
Total salmonid salmonid species (spring outmigration)	180	gap	0.41	2	0.668
		velocity	0.26	1	0.613
		angle	0.00	1	0.987
		gap vs. velocity	2.26	2	0.065
		gap vs. angle	0.44	2	0.650
		velocity vs. angle	0.68	1	0.416
		gap vs. velocity vs. angle	0.46	2	0.635
Total salmonid species (spring outmigration)		date	1.87	1	0.175
		gap	0.86	2	0.427
		velocity	1.72	1	0.193
		angle	0.01	1	0.925
		gap vs. velocity	0.43	2	0.652
		gap vs. angle	0.44	2	0.643
		velocity vs. angle	0.57	1	0.453
		gap vs. velocity vs. angle	0.02	2	0.981
Subyearling chinook salmon	<180	date	3.27	1	0.073
		gap	0.83	2	1.438
		velocity	12.27	1	0.001 †
		angle	0.10	1	0.753
		gap vs. velocity	0.06	2	0.937
		gap vs. angle	1.74	2	0.180
		velocity vs. angle	0.44	1	0.510
		gap vs. velocity vs. angle	2.02	2	0.136