A STUDY TO DETERMINE THE BIOLOGICAL FEASIBILITY OF A NEW FISH-TAGGING SYSTEM, 1998-99

ANNUAL REPORT

by

Sandra L. Downing
Earl F. Prentice
Bradley W. Peterson
Edmund P. Nunnallee
Bruce F. Jonasson

Prepared for

U.S. Department of Energy
Bonneville Power Administration
Division of Fish and Wildlife
P.O. Box 3621
Portland, Oregon 97208-3621

Project 83-319
Contract 97-AI-31168

Fish Ecology Division
Northwest Fisheries Science Center
National Marine Fisheries Service
National Oceanic and Atmospheric Administration

September 2000

EXECUTIVE SUMMARY

This report covers our work during 1998 and 1999 (FY99) on a project to expand and improve technology for passive-integrated-transponder tags (PIT tags) throughout the Columbia River Basin. The National Marine Fisheries Service (NMFS) in cooperation with the Bonneville Power Administration (BPA) conducted the work.

Timely and accurate information derived from PIT-tag technology is increasingly critical to resource stakeholders in assessing the effectiveness of efforts to enhance survival of juvenile and adult salmonids. Continued development of PIT-tag technology will enable researchers and fisheries managers to address issues expressed in the NMFS biological opinions for operation of the Federal Columbia River Power System (FCRPS) and the proposed Snake River Recovery Plan. The FY99 work was divided into individual projects that are covered separately in this report.

Transition to the 134.2-kHz ISO-Based PIT-Tag System for Juvenile Salmon

In 1997, BPA established a multi-agency Transition Planning Team to oversee the entire transition from the 400-kHz PIT-tag system to a new 134.2-kHz ISO-based system. Two reasons why this transition was necessary were the difficulty in locating replacement parts for the 400-kHz system and because the ISO-based technology would allow data to be collected on tagged adult fish transiting fish ladders. The Transition Planning Team then established multi-agency technical teams to address individual system components. The focus in FY99 was on planning for the installation that would begin in September 1999. Scheduling and planning for this event was a major effort headed by Pacific States Marine Fisheries Commission (PSMFC) with NMFS personnel attending meetings on this topic for the Infrastructure and Transition Planning Teams.

Based on a review of the status for each component (stationary and portable transceivers, tags, infrastructure needs, installation schedules, and systems management tools), the Transition Planning Team in August 1999 recommended proceeding with the transition. In order to ensure that electrical and communication line installations would be completed in time to meet the year 2000 transition deadline, it was necessary to turn off the 400-kHz interrogation systems earlier than normal in September. Installation of all necessary equipment is scheduled for completion by mid-March 2000, and acceptance testing will be concluded by mid-April. The acceptance tests will include fish tests at all of the dams to obtain accurate measurements of reading efficiencies for individual coil-transceiver combinations. NMFS personnel are heading the design of the fish tests, but the actual tests will be a multi-agency effort.

Development of 134.2-kHz ISO-Based Systems for Fish Ladders

The ability to detect returning PIT-tagged adult salmon has long been a critical need for the fisheries community that was included in the 1995 NMFS biological opinion. In that document, the U.S. Army Corps of Engineers (COE), BPA, and NMFS are directed to "complete the design and development of adult fish PIT-tag detector systems in adult fish passage facilities at mainstem dams immediately, followed by installation with no adverse effect to adult passage" (NMFS 1995; Incidental Take Statement, para. 14).

The two 400-kHz systems installed for detecting adult salmon use electronics developed for juvenile fish. These 400-kHz systems can interrogate adult salmon transiting 31-cm-diameter pipes but are incapable of interrogating fish transiting fish ladders. Consequently, one of the main reasons the fisheries community decided to switch to 134.2-kHz ISO-based technology was that it would allow data to be collected on tagged adult fish transiting ladders.

Because there were no commercially available transceiver systems that could read tags in fish ladders, NMFS initiated a development program for interrogation systems for fish ladders using ISO-based technology in FY98. The goal of the NMFS development program is to develop an interrogation system that can be installed into any fish ladder within the FCRPS. The installation plan is to install interrogation systems that will cover one ladder at Bonneville Dam for 2001 and all of the ladders at Bonneville Dam for 2002, when fish tagged with ISO tags are likely to start returning in statistically significant numbers. Installation of interrogation systems at additional dams will be evaluated for 2003.

Interrogation systems consist of antenna systems (antenna coils and their housings) and transceiver systems that decode the return signals and transmit tag codes to the computer. In addition, new techniques must be developed to evaluate the interrogation systems in this new environment. All three of these components must be developed to produce interrogation systems that will work in fish ladders. The development efforts are focusing on the interrogation of fish passing through weir orifices since the majority of salmonids use them (anecdotal evidence suggests around 90%). Work completed in FY99, and some that is planned for the future, is described in the report.

In FY99, NMFS developed and evaluated several different antenna systems for orifices. Orifice antenna housings of all three styles (insert-only, insert with extension, and extension-only) were installed at Bonneville Dam during January and February 1999. All antenna systems are being evaluated using the same criteria: ease and cost of installing, water tightness, pressure effects on the housing, resistance to damage, fish response to the antenna housings, and ability to read tags when attached to transceiver systems. During installation, no significant differences were found in terms of ease and cost for installing the three styles of housings.

Using a prototype transceiver system, all of the antenna systems yielded acceptable read ranges, as throughout the orifice openings most read ranges were almost double the minimum

25-cm read range needed to detect transiting fish. Based on the measured tuning frequency values of 1999, the antenna systems appeared to remain stable electronically over the season, and no water leaks were evident. Fish response to the antenna housings is being determined with video cameras positioned to monitor fish transiting modified and unmodified orifices. During 1999, the COE did not find any significant difference in the percentage of fish using the two types of orifices, nor did they document any fish species (e.g., salmonids and lamprey) hesitating to use the modified orifice.

Antenna housings installed in January 1999 were inspected in December 1999. The fiberglass housings had held up amazingly well; only a single nick (~0.5 cm) in the fiberglass gel-coat was apparent on one of the housings. Based on present results, NMFS is making a preliminary recommendation to use the insert-only design, since it does not change the original orifice geometry.

To meet the 2002 goal of installing PIT-tag interrogation systems for adult salmon in all fish ladders at Bonneville Dam, the NMFS R&D team and BPA have taken a Aspread the risk@ approach by supporting several transceiver development efforts simultaneously. One path supported Destron Fearing (DF) in modifying their ISO-based transceiver system (model FS1001) and is referred to as the DF-Adult system. The other path supported the development of an Aopen architecture@ system that separates the analog signal analysis module from the module responsible for processing codes and interfacing with data processing systems. For the open-architecture system, NMFS has contracted two engineering companies to design and build analog boards while NMFS is developing the interface module.

In early FY99, laboratory tests at NMFS Sand Point Electronics Shop were conducted to determine the effect of the reinforcement bars in fish ladder weirs on antenna electrical loading, tuning, and PIT-tag detection with different transceiver systems and several antenna configurations. Tests using the PE-Flat (Patten Engineering's flat-plate transceiver) and DF-Adult systems determined that antenna loading was eliminated if the reinforcement bar was cut back 15 cm from the antenna. Laboratory tests also determined that there were no differences between read-range measurements taken under dry and wet conditions for the ISO-based transceiver systems.

During the various laboratory tests, the engineers observed that varying in-band radio frequency noise levels would significantly reduce read-range measurements with the larger orifice antennas. For example, with the PE-Flat system, read range was reduced by 30% with an increase in average noise levels from 30 to ~20 mVpp (millivolts peak-to-peak). Persistent average levels above ~250 mVpp effectively prevented PIT tags from being detected. Therefore, NMFS personnel knew it would be important to determine and monitor the ambient RF (radio frequency) levels in fish ladders.

Unfortunately, an ambient RF situation can change at any time, and it is complicated because noise from different sources that alone would not interfere with the transceivers can

combine to create frequencies that do cause problems. To make accurate comparative measurements among transceiver systems in the laboratory, we recommend that an EMI-shielded room be constructed that will allow read-range and reading-efficiency measurements to be made under minimal ambient RF noise conditions (i.e., at levels too weak to interfere with the performance of the transceivers).

Extended-range PIT-tag interrogation systems can only be tested to a limited extent in a laboratory setting. Therefore, field tests are required to verify laboratory findings, and they are essential to determine the effects of antenna housings on hydraulics, the behavioral responses of fish to antenna systems, the reading efficiency with fish, the effect of ambient RF noise on tag detection, and the suitability of equipment for installation and long-term operation. Tests conducted under static watered-up conditions with PE-Flat and DF-Adult transceiver systems showed no significant differences from the read ranges measured under dry ladder conditions.

By the end of FY99, after much development on both transceiver systems, tags could now be read throughout modified orifices measuring up to 3,721 cm^2 in both dry and watered-up ladder conditions. These results suggest that both the DF-Adult and open-architecture systems should be able to read PIT-tagged fish in the orifices at Bonneville Dam. More development tests will be conducted in spring 2000 with PIT-tagged spring chinook salmon (*Oncorhynchus tshawytscha*).

Determining tag-reading efficiencies for specific antennas installed in fish ladders is more complicated than for systems installed at the bypass/monitoring facilities for juvenile salmon because adult fish can follow multiple pathways through a fish ladder. To obtain this information on fish passage in a ladder, the COE and NMFS did some preliminary work during FY99 with a bright pink streamer tag tested with various types of video cameras. Results from preliminary tests conducted with steelhead indicated that a pink streamer tag, measuring 15-cm long by 2.5-cm wide and constructed of nylon web, provided a good visual marker that could be seen on the videotape.

Development of a 134.2-kHz ISO-Based Flat-Plate System

In anticipation of replacing the existing 400-kHz flat-plate PIT-tag interrogation system for juvenile salmon at Bonneville Dam in 2000, NMFS began development in 1997 on a 134.2-kHz ISO-based flat-plate system. A number of steps were completed during 1999 to ensure that the redesigned flat-plate system was ready for installation at Bonneville Dam. These steps included fabricating production electronic boards for the various transceiver components, adding a test tag that is periodically activated, and packaging the components into a single box.

Before finalizing the designs for the transceiver boards, laboratory bench tests were performed that yielded significant improvements in the electronics. NMFS also evaluated several antenna designs in the laboratory. As a result, when the final boards were produced, the

number of transceivers required for this application had decreased from eight to four. When the final transceivers were delivered in September, more tests were conducted at Bonneville Dam. The final combination yielded consistent reading ranges of 18-19 cm. We recommend going ahead with the planned installation scheduled for February 2000 and then evaluating the system with fish in March.

Continued Operation of the 400-kHz Pass-By (Flat-Plate) Interrogation System at Bonneville Dam

NMFS installed a 400-kHz pass-by (flat-plate) PIT-tag interrogation system for juvenile salmon at the Bonneville Dam First Powerhouse in 1996. The continued reliable operation of this system is essential to meet informational needs of fisheries investigators and managers in the Columbia River Basin. To ensure reliable system operation, we conducted maintenance on the flat-plate system prior to and during the 1999 field season. Overall, this was the most trouble-free year for the 400-kHz flat-plate system. The 400-kHz system was permanently removed in early November.

The Pass-Through PIT-Tag Interrogation System at Bonneville Dam

The pass-through system installed in the Second Powerhouse at Bonneville Dam in 1997 was removed at the end of the 1998 field season in preparation for the new bypass/monitoring facility being constructed by the COE. Most major components of the new fish facility became operational during spring 1999. In order to continue to interrogate all juvenile salmonids passing through the dam=s facilities, NMFS installed a temporary pass-through PIT-tag interrogation system for the 1999 field season.

The pass-through system was evaluated for reading and gate efficiencies with 180 subyearling chinook salmon in April 1999. Prior to testing with fish, delay times for each of the four coils above the fish diversion gate were established with tests using tagged sticks. The four coils, in combination, read or detected all of the fish. Reading efficiencies for the individual coils ranged from 91.1 to 97.2% and the three-way rotational gate successfully diverted all 180 fish. The new bypass/monitoring facility will be finished for the 2000 field season and the temporary 400-kHz system will be replaced by PSMFC with a 134.2-kHz ISO-based system in the fall. We recommend that the reading and gate efficiencies be determined for this new system.

Electromagnetic Field Emission Levels Measured at Bonneville Dam

To alleviate the health concerns raised by some COE employees at Bonneville Dam, NMFS contracted an independent engineer to make electromagnetic field emission measurements at all of the 400-kHz sites in April 1999. The highest measured electrical and magnetic fields were

found 20-cm above the flat-plate system (unlike under normal operational conditions, the flat plate was left active when it was raised out of the downwell); however, they were still far below the levels associated with deleterious biological effects. Therefore, the contractor did not recommend making any change in operations of the interrogation equipment or adding any new safety precautions.

Emission measurements were also made on the 134.2-kHz ISO-based equipment that will be installed at Bonneville and other Columbia River Basin dams. Based on these measurements, NMFS personnel are confident that the ISO-based equipment for the juvenile system and the flat-plate system will be safe for humans working in its vicinity.

Three-Way Side-to-Side Fish Diversion Gate

In 1997, NMFS constructed a prototype three-way side-to-side fish diversion gate measuring 25 cm in diameter. The general operating principle for these gates is that fish pass through a flexible hose section connected to a track, which is moved sideways to different diversion pathways. For FY99, NMFS proposed to evaluate the three-way side-to-side fish diverter at either Lower Granite Dam or at Little Goose Dam. However, COE personnel in early FY99 indicated that a portion of the fish facility at Little Goose Dam was to be modified and that the modifications would include installing a three-way diverter. At a planning meeting held at the dam in 1999, it was decided by NMFS, COE, and PSMFC that the three-way side-to-side diversion gate was the best design for this location. Thus, the evaluation was delayed until this COE modification was completed.

Separation-by-Code System: Computer Program (MULTIMON)

During 1992-1994, NMFS developed and evaluated a separation-by-code system (computer program and fish diversion gates) at their Manchester Research Station. The computer program controls the separation of targeted PIT-tagged fish from non-targeted tagged and non-tagged fish based on their individual tag codes. Since 1996, the computer program has been called MULTIMON. The development of MULTIMON is a joint project with Pacific Northwest National Laboratory (PNNL), whose personnel write the computer code. NMFS personnel oversee the development; test the program after modification; and collaborate with PSMFC personnel on technology transfer, maintenance issues, and assisting fisheries researchers.

The separation-by-code system was first tested at Lower Granite Dam in 1995; however, the computer program has changed a great deal since then. Because research needs change each year and new equipment (i.e., hardware, software, and electronic components) is installed or upgraded, we recognize that MULTIMON is unlikely to ever be totally static. Nonetheless, the program has reached a stage where NMFS and PSMFC agreed that after the conclusion of the 1999 field season, the primary responsibility of maintaining MULTIMON would be transferred

to PSMFC. Most of the computer program modifications for the 1999 field season were to make the operations and maintenance of the program easier for PSMFC. During the 1999 season, several research projects used the separation-by-code systems at Lower Granite, Little Goose, John Day, and Bonneville Dams.

During the 1999 migration season, all of the dams monitored by PSMFC used MULTIMON. Most of these sites used the data-collection platform that includes two personal computers running MULTIMON in DOS that are networked to a SUN computer performing file management tasks in UNIX. A Windows 95 platform was tested at several sites because it would allow PSMFC to use the software program LapLink as a means to remotely check on the status of the ISO-based transceivers. NMFS personnel led a thorough evaluation of the LapLink/Windows 95 platform conducted at McNary Dam in February 1999. The LapLink/Windows 95 platform was directly compared to the DOS/SUN platform. There were no differences in data collection, in time it took to read tags, or in time it takes to send out the command to activate the slide gates. For the 2001 season, PSMFC is considering eliminating the SUN computers and just using two computers running Windows 95 at all of its sites.

To assist in the transfer of MULTIMON to PSMFC, modifications were implemented to make the program easier for PSMFC to operate and maintain and easier to administer remotely. These modifications were designed to allow the program administrator and the operation and maintenance technicians not only to possibly determine the cause of a problem remotely, but also to potentially fix it remotely as well. Examples are given in the report.

The ability for MULTIMON to recognize remote commands that would enable PSMFC to manage its separation-by-code administrative tasks more effectively from its Gladstone office was added in 1997. Unfortunately, the process for sending remote commands has been quite awkward. Thus, for 2000, NMFS recommends that an interface program be written that makes this process straightforward and keeps the program actively collecting data.

Information Transfer, Technical Reviews, and Technical Support

As in previous years, NMFS actively advised other agencies on PIT-tag related matters, such as facility designs to accommodate PIT-tag systems, PIT-tag system maintenance, assistance in using prototype equipment and the MULTIMON computer program, and information transfer. They also provided assistance in adapting PIT-tag technology for investigations into new areas. Because NMFS personnel designed or co-developed many of the present PIT-tag systems and their components, and because they provide technical support and training to ensure the reliable operation of these systems, these personnel are an important resource for users of PIT-tag technology throughout the Columbia River Basin. Specific technology transfer activities of NMFS personnel during the reporting period are itemized in this report.

CONTENTS

INTRODUCTION

The National Marine Fisheries Service (NMFS) in cooperation with the Bonneville Power Administration (BPA) conducts research and development to expand and improve technology for passive-integrated-transponder tags (PIT tags) throughout the Columbia River Basin. The work conducted during 1998-1999 was divided into individual projects that are covered separately in this report.

Efforts by personnel associated with this project have produced and will continue to produce results that aid resource stakeholders in assessing the effectiveness of actions taken to enhance the survival of juvenile and adult salmonids. These products and their uses include

- Survival and migration timing information on stocks to evaluate water management strategies and fish passage/collection facilities.

- Data needed for the management and restoration of salmonids and other fish stocks.

- Information required for the management of multiple species in a variety of habitats.

- Tools that enable fisheries researchers and managers to address previously unanswerable questions.

These products are also used in genetic, physiology, behavior, and captive broodstock research on endangered species. The continued development of PIT-tag technology will enable researchers and fisheries managers to address issues expressed in both the NMFS biological opinions for operation of the Federal Columbia River Power System (FCRPS) and the proposed Snake River Recovery Plan (Tasks 2.1D, 2.3.b.4, 2.4.a, 2.6.c.2, and 2.9.d).

DEVELOPMENT AND EVALUATION OF PIT-TAG TECHNOLOGY

Transition to the 134.2-kHz ISO-Based PIT-Tag System for Juvenile Salmon

In 1997, BPA established a multi-agency Transition Planning Team to oversee the entire transition from the 400-kHz PIT-tag system to a new 134.2-kHz system based on documents published by the International Organization for Standardization (ISO). The Transition Planning Team then established the following multi-agency technical teams to address individual system components:

Team	Area of Oversight
Transceiver Technical Evaluation Team	Development of stationary transceivers
Portable Transceiver Evaluation Team	Development of portable readers
Tag Development Team	Development of suitable PIT tags
Infrastructure Team	Plan and oversee construction necessary at the dams for the transition, installation of stationary transceivers, and necessary changes to tagging software and PTAGIS database for implementing the 134.2-kHz ISO-based system.

The Transition Planning Team met on 9 September 1998 and reviewed progress to date on all components (stationary and portable transceivers, tags, infrastructure needs, installation schedules, and systems management tools). The team concluded that all of the components were or would be available in time to complete the transition for the year 2000 smolt migration. Therefore, they recommended that the transition proceed with a final stop-go decision to be made in August 1999.

The focus in FY99 was on planning for the installation that would begin in September 1999. Scheduling and planning for this event was a major effort headed by Pacific States Marine Fisheries Commission (PSMFC). NMFS personnel attended meetings on this topic for the Infrastructure and Transition Planning Teams. In order to ensure that electrical and communication line installations would be completed in time to meet the year 2000 transition deadline, it was necessary to turn off the 400-kHz interrogation systems at Lower Granite, Little Goose, and Lower Monumental Dams on 1 September 1999. At McNary Dam, the 400-kHz system was turned off on 1 October 1999. Installation of all necessary equipment is scheduled for completion by mid-March 2000. Acceptance testing will be concluded by mid-April. The acceptance tests will include fish tests at all of the dams to obtain accurate measurements of reading efficiencies for individual coil-transceiver combination. NMFS personnel are heading

the design of the fish tests, but the actual tests will be a multi-agency effort.

Although there were no planned formal evaluations conducted on the stationary and portable transceivers in FY99, these units were used during this year. No problems occurred with the stationary transceivers that were installed at McNary and John Day Dams. The nearby ISO-based transceivers were able to operate at full capacity when new crystals were installed into the 400-kHz equipment at John Day Dam to make them operate at 402 kHz. Without the new crystals, ISO-based equipment within 3-10 m of 400-kHz equipment read tags at a much diminished capacity.

The final task for the Transceiver Technical Evaluation Team was monitoring the manufacturing and delivery of the final transceiver products for finishing the network-wide installation. All of them were delivered during summer 1999. The delivery of the 200 portable transceivers was delayed 2 months, but by 1 July 1999 all had been delivered to BPA and distributed to the researchers. Acceptable 12-mm tags needed by the fisheries community had already been available in 1998. Tags produced by Datamars and Destron Fearing after December 1997 should satisfy fisheries community requirements. BPA has a contract with Destron Fearing to buy their 12-mm tags exclusively through 2001.

Based on a review of the status for each component, the Transition Planning Team in August 1999 recommended proceeding with the transition. Thus, the installation effort began in earnest in September. Figure 1 presents a diagram of the new ISO-based PIT-tag system that will be used for juvenile salmon throughout the Columbia River Basin in 2000. This interrogation equipment, which is designed for juvenile salmon, will be used to monitor adult salmon passage at Lower Granite Dam and the Adult Fish Facility at Bonneville Dam, where some 400-kHz equipment will be replaced in time for the 2001 adult migration. Most likely the rest of the 400-kHz equipment will be removed from these two sites in 2003.

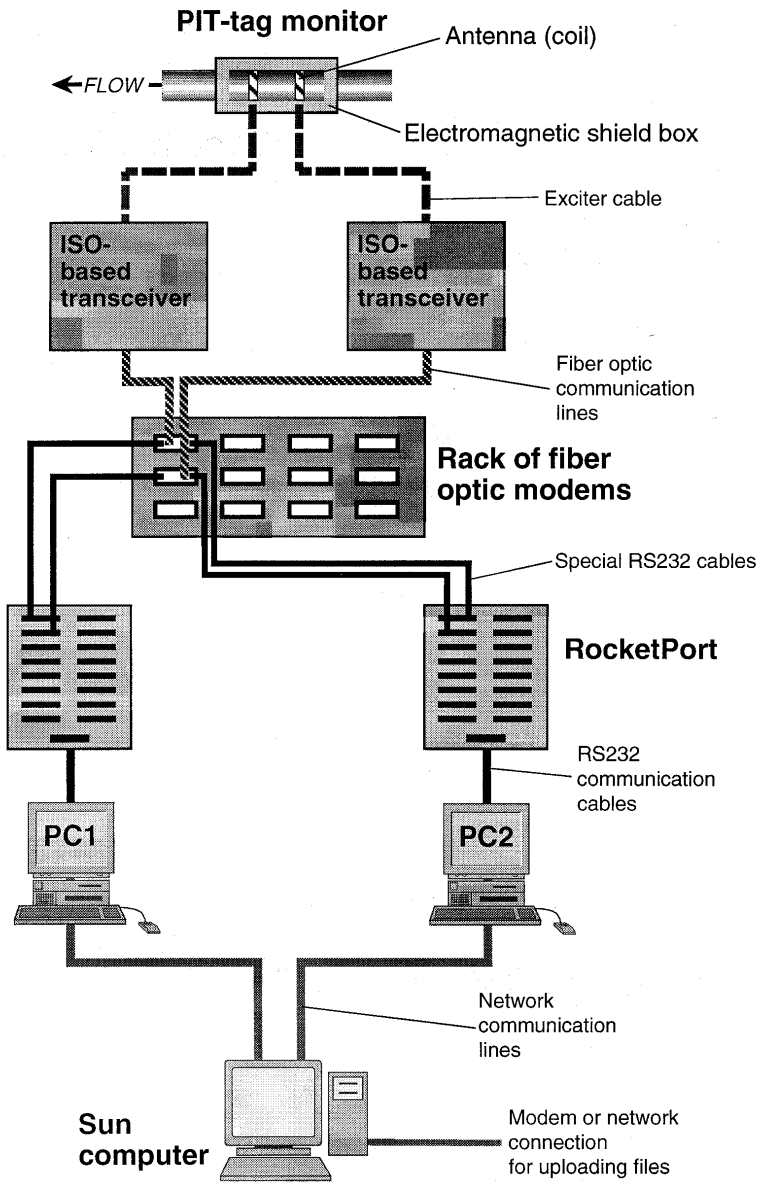

Figure 1. General schematic of a stationary 134.2-kHz ISO-based transceiver system that will be used at all Columbia River Basin dams in 2000.

Development of 134.2-kHz ISO-Based Systems for Fish Ladders

Introduction

The ability to detect returning PIT-tagged adult salmon has long been a critical need for the fisheries community; its need was included in the 1995 NMFS biological opinion. In that document, the U.S. Army Corps of Engineers (COE), BPA, and NMFS are directed to "complete the design and development of adult fish PIT-tag detector systems in adult fish passage facilities at mainstem dams immediately, followed by installation with no adverse effect to adult passage" (NMFS 1995; Incidental Take Statement, para. 14). The 1998 NMFS supplemental biological opinion also indicated the need for adult detection systems at FCRPS projects (NMFS 1998). Data from detection systems for adult salmon will support investigations addressing transport benefits, conversion rates between dams, travel time, fallback rates, and smolt-to-adult return rates (SAR) of listed steelhead and other salmonids (XII.3.e). In addition, the Northwest Power Planning Council recognized the need and called for a PIT-tag system for adults in its 1994 Fish and Wildlife Program.

The first interrogation system for adult salmon using 400-kHz technology was installed at Lower Granite Dam in 1986 and the second was installed in the Adult Fish Facility at Bonneville Dam in 1998. These 400-kHz systems, using electronics developed for juvenile fish, can interrogate adult salmon transiting 31-cm-diameter pipes but are incapable of interrogating fish transiting fish ladders. Thus the 400-kHz systems can provide the fisheries community with only a limited amount of data on adult passage. Consequently, one of the main reasons the fisheries community decided to switch to 134.2-kHz ISO-based technology was that it would allow data to be collected on tagged adult fish transiting fish ladders.

Longer read range is possible with 134.2-kHz tags than with 400-kHz tags, because they incorporate a different data recovery scheme, new silicon technology, and are governed by less stringent Federal Communication Commission (FCC) emission regulations. These advantages should enable the detection of returning adult salmon within fish ladders instead of detection being restricted to small-diameter pipes. Because there were no commercially available transceiver systems that could read tags in fish ladders, NMFS initiated a development program for interrogation systems for fish ladders using ISO-based technology in FY98.

The goal of the NMFS development program is to develop an interrogation system that can be installed into any fish ladder within the FCRPS. Regional coordination and participation in critical planning and decisions are essential to the success of this program. To this end, the Action Agencies (BPA and COE) and their contractors will establish an Adult PIT-Tag Oversight Committee (APTOC) in early 2000. The APTOC will replace the Adult PIT-Tag Development Team (APTDT), a management team established in 1998.

The APTOC is planned to include NMFS, U.S. Fish and Wildlife Service, the separate state agencies, Columbia River Inter-Tribal Fish Commission, Columbia Basin Fish and Wildlife Authority, and PSMFC. As the Action Agencies, BPA and COE will maintain ultimate responsibility for implementation and policy decisions with their separate responsibilities outlined in their June 1996 memorandum of understanding (BPA and COE 1996). The APTOC will address technical issues and provide collective insight on policy and implementation matters.

The installation plan supported by APTOC is to install interrogation systems that will cover one ladder at Bonneville Dam for 2001 and all of the ladders at Bonneville Dam for 2002, when fish tagged with ISO tags are likely to start returning in statistically significant numbers. Installation of interrogation systems at additional dams will be evaluated for 2003.

Interrogation systems consist of antenna systems (antenna coils and their housings) and transceiver systems that decode the return signals and transmit tag codes to the computer. In addition, new techniques must be developed to evaluate the interrogation systems in this new environment. All three of these components must be developed to produce interrogation systems that will work in fish ladders. Work completed in FY99, and some that is planned for the future, is described below.

The initial work has concentrated on designing and fabricating antenna systems for orifices, developing transceivers, developing system evaluation techniques for use in the field, and recording fish behavior with video cameras in orifices equipped with antenna systems. The development efforts will continue to focus on the interrogation of fish passing through weir orifices since the majority of salmonids use them (anecdotal evidence suggests around 90%). Until the COE collects more information on the proportion of fish that pass over overflows and whether the weir overflows can be modified, no informed decision can be made to implement or install detectors for weir overflows.

Antenna Systems

In FY99, NMFS developed and evaluated several different antenna systems for orifices. NMFS had designed three antenna-housing styles for orifice applications (insert-only, insert with extension, and extension-only) in FY98 (Prentice et al. 1999). In FY99, we tested different materials (i.e., high-density polyethylene, polyurethane, polyvinyl chloride plate, and fiberglass) for fabricating these housings before settling on fiberglass. In addition, different antenna configurations were investigated to learn which yielded better reading ranges. This process will be ongoing, as the antenna configuration will change with the development of transceiver systems.

Antenna housings were then fabricated and installed into two fish ladders at Bonneville Dam, the Cascades Island ladder and the adult exit ladder. In January 1999, four antenna housings with 61- by 61-cm (3,721 cm^2) openings were installed in the Cascades Island ladder: insert with extension, extension-only, and two insert-only housings with different antenna configurations. Two orifice antenna housings (insert-only and extension-only) with 46- by 46-cm (2,116 cm^2) openings were installed in the adult exit ladder in February 1999.

All antenna systems are being evaluated using the same criteria: ease and cost of installing, water tightness, pressure effects on the housing, resistance to damage, fish response to the antenna housings, and ability to read tags when attached to transceiver systems. During installation, no significant differences were found in terms of ease and cost for installing the three styles of housings. They were all fairly easy to install, and costs were around $10,000 per unit. During installation, read ranges were determined for different positions throughout the orifice openings for all of the housings (see Table 1 and Fig. 2). Tag read ranges were determined using the static-reading-efficiency (SRE) diagnostic tool that is part of the transceiver systems (i.e., DF-Adult and PE-Flat systems, see page 11).

The SRE diagnostic tool indicates how many successful reads were made out of 100 consecutive tag transmissions (3,050 milliseconds). We use this tool to make measurements throughout the orifice opening to characterize the shape of the read volume for a particular antenna. Basically, within the orifice itself, the SRE values are at 100%. They then decline as a tag is moved away from the orifice opening. How fast SRE values decline depends on tag position relative to the orifice opening, as well as tag orientation. To determine the distances at which a tag can be read 1 and 70% of the time, we used tag orientations of both 0° and 45°. The 1% SRE distances for optimally oriented 0° tags represent maximum read ranges (i.e., the outer limits of the read volume) and the 70% SRE distances represent the boundaries of the electromagnetic field, where fish swimming at 3 m/second are normally detected.

Using the PE-Flat system, all of the antenna systems yielded acceptable read ranges, as most of the 70% SRE distances measured throughout the orifice openings were almost double the minimum 25-cm read range needed to detect transiting fish (Table 1). The insert-only and extension-only antenna housings installed in the adult ladder for the PE-Flat system also yielded sufficient read ranges.

During FY99, NMFS periodically monitored the antenna systems installed in the ladders for electronic stability (tuning conductance and other parameters were measured) and water leakage over the course of the field season (Table 2). Based on the measured tuning frequency values from 1999, the antenna systems appeared to remain stable electronically over the season, and no water leaks were evident. Fish behavior in response to the antenna housings is being determined with video cameras positioned to monitor fish transiting modified and unmodified orifices in the Cascades Island ladder, and the COE is conducting this work.

During 1999, the COE did not find any significant difference in the percentage of fish using the two types of orifices, nor did they document any fish species (e.g., salmonids and lamprey) hesitating to use the modified orifice (see Appendix). The antenna housings installed in January 1999 in the Cascades Island ladder were inspected in December 1999. The fiberglass housings had held up amazingly well; only a single nick (~0.5 cm) in the fiberglass gel-coat was apparent on one of the housings.

Based on present results, NMFS is making a preliminary recommendation to use the insert-only design since it does not change the original orifice geometry. The COE will concentrate its video work on this style in 2000 to compare fish movement through modified and unmodified orifices. We will also request that the COE investigate whether the large downstream chamfers associated with the orifices in some fish ladders can be reduced to a standard 1-in or 2.5-cm size. This would permit a wider antenna coil to be installed and make fabrication of the antenna housings easier, as only one mold would be needed for each orifice size.

Since the antenna coils are larger than those installed in the collection/bypass facilities for juvenile salmon, they are more susceptible to ambient radio frequency (RF) noise. If the ambient RF noise at the hydroelectric projects cannot be eliminated, and adding some shielding to the antenna housing can reduce its impact, then the housing design will be modified in the future. Unfortunately, the weir configuration prevents the use of all but very minimal electromagnetic field (EMF) shields with these antenna systems. Therefore, we recommend that the fisheries community make efforts to identify, and if possible eliminate, the sources of ambient noise (we recognize that in some cases eliminating the sources will not be possible).

Table 1. Read ranges (cm) for three antenna-housing designs installed in the 61-cm (24-in) square orifices within the Cascades Island fish ladder at Bonneville Dam. Measurements were taken throughout the orifice opening using the compass-based directions to indicate the tag positions (see Fig. 2 below). These measurements were taken with the prototype Patten Engineering system in January 1999 and are based on a static reading efficiency of 70% for an optimally oriented 12-mm Destron Fearing tag. The values in parentheses are the widths of the coils within the housings.

	Antenna Housing		
Tag position	Insert only (11.5 cm)	Extension only (6 cm)	Extension & insert (24 cm)
Center	74.0	76.0	65.4
C-NW	49.5	54.0	47.0
C-NE	46.5	46.5	46.0
C-SW	47.0	48.0	41.0
C-SE	49.5	49.0	42.0
S-S	63.5	64.0	54.0

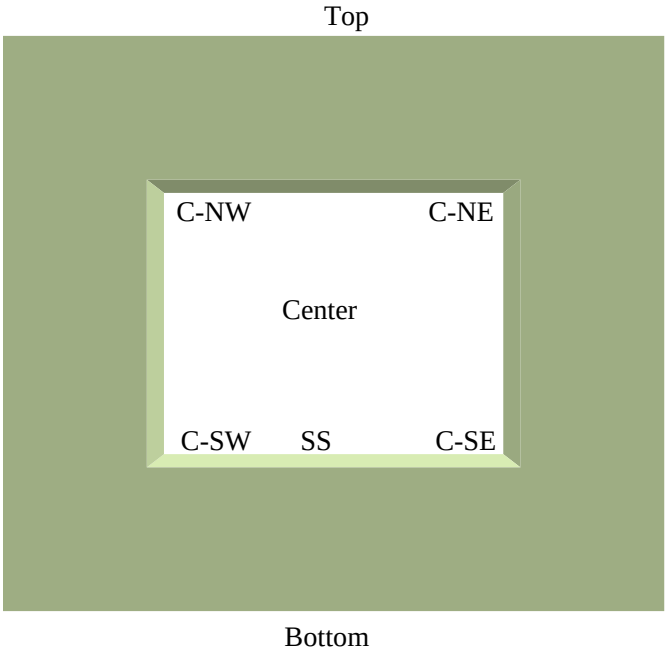

Figure 2. The figure depicts an insert-only style of antenna housing for orifices. It also shows some of the compass-based locations where measurements were taken to determine read ranges for PIT tags.

Table 2. The tuning frequency values (kHz) taken periodically over 1999 for the four antennas installed in Cascades Island fish ladder at Bonneville Dam during January 1999. Differences between the values for the different antennas are not important, as the only concern is whether an individual antenna=s values change over time. The measurements have an accuracy of ± 0.5 kHz. Only measurements taken while the fish ladder was full of water are presented because the tuning frequency does change slightly when measurements are taken in a dry fish ladder.

		Dates measurements taken		
Antenna housing design (coil width)	Weir No.	2/26/99	5/19/99	7/22/99
Insert only (11.5 cm)	56	131.7	131.9	132.0
Extension only (6 cm)	55	131.1	131.2	131.3
Extension only (3 cm)	54	134.1	133.7	133.9
Extension and insert (24 cm)	53	127.6	128.2	127.9

Transceiver Systems

To meet the 2002 goal of installing PIT-tag interrogation systems for adult salmon in all fish ladders at Bonneville Dam, the NMFS R&D team and BPA have taken a Aspread the risk@ approach by supporting several transceiver development efforts simultaneously. One path supported Destron Fearing (DF) in modifying their ISO-based transceiver system (model FS1001[1]) and is referred to as the DF-Adult system. The other path supported the development of an Aopen architecture@ system that separates the analog signal analysis module from the module responsible for processing codes and interfacing with data processing systems. For the open-architecture system, NMFS has contracted two engineering companies to design and build analog boards while NMFS is developing the interface module.

During FY99, RF Engineering submitted a design and simulation report for their analog board followed by a contract for them to build that analog board, whose delivery is set for early FY00. The other contractor, Patten Engineering (PE), is also scheduled to deliver an analog board in early FY00; however, in the interim, development tests were run with the PE-Flat system designed for the ISO-based pass-by (flat-plate) transceiver system.

In early FY99, laboratory tests at NMFS Sand Point Electronics Shop were conducted to determine the effect of the reinforcement bars in the concrete fish ladder weir walls on antenna electrical loading, tuning, and PIT-tag detection with different transceiver systems and several antenna configurations. A full-scale model of the reinforcement-bar layout for a Cascades Island fish ladder weir wall was constructed. The orifice modeled measured 61-cm high by 61-cm wide by 20-cm deep. Tests using the PE-Flat system determined that antenna loading was eliminated if the reinforcement bar was cut back 15 cm from the antenna (Table 3). Similar tests conducted with the DF-Adult system found the same results. When NMFS supplied the COE with this information, COE structural engineers indicated that they had no objections to modifying the weirs in the Bonneville Dam fish ladders with this amount of cutting.

Laboratory tests were also conducted to determine if there were any differences between read-range measurements taken under dry and wet conditions for the ISO-based transceiver systems. No significant differences were found, which is not surprising considering that the dry tuning measurements tend to be only 1-3 kHz lower than those taken under wet conditions. The equipment easily handles this small difference (a simple tuning adjustment is made in the transceiver). In contrast, the 400-kHz technology varies significantly between dry and wet conditions, where the tuning values differ by 20-30 kHz. This difference is too large for a simple adjustment of the transceiver to maintain the tune between the two conditions; the antenna would have to be adjusted in order to tune in the new environment. Adjusting the antenna is not possible with the potted antenna systems fabricated for the orifices.

Table 3. Maximum read ranges (cm) for the different distances (cm) between the antenna and the reinforcement bar within a mockup of a weir wall from the Cascades Island fish

[1] Reference to trade names does not imply endorsement by the National Marine Fisheries Service, NOAA.

ladder at Bonneville Dam. These measurements were taken only in the direction away from the mockup with the prototype PE-Flat system in December 1998 and an extension-only antenna housing with a 63.5-cm antenna that was 2.5 cm wide. The read range values are based on a static reading efficiency of 1% for an optimally oriented 12-mm Destron Fearing tag.

Distance between antenna and the weir wall's rebar (cm)	Maximum read range in center of antenna (cm)
4	23
9	18
15	51
far from rebar	53

During the various laboratory tests, the engineers observed that varying in-band RF noise levels significantly reduced read-range measurements with the larger orifice antennas. For example, with the PE-Flat system, read range was reduced by 30% with an increase in average noise levels from 30 to ~120 mVpp (millivolts peak-to-peak). Persistent average levels above ~250 mVpp effectively prevented PIT tags from being detected. These particular values are specific to a particular test point in this transceiver system; however, one would see similar reductions in read ranges for the DF-Adult system exposed to the same noise levels, but the reported values for the same noise would probably be different.

Therefore, NMFS personnel knew it would be important to determine and monitor the ambient RF levels in fish ladders. Unfortunately, an ambient RF situation can change at any time and it is complicated because noise that alone would not interfere with the transceivers can combine with noise from different sources to create frequencies that do cause problems. To make accurate comparative measurements among transceiver systems in the laboratory, we recommend that an EMI-shielded room be constructed that will allow read-range and reading-efficiency measurements to be made under minimal ambient RF noise conditions (i.e., at levels too weak to interfere with the performance of the transceivers).

In order to verify laboratory electronic tests under field conditions, tests were conducted in 1999 at Bonneville Dam with the PE-Flat and DF-Adult transceiver systems. For example, read ranges measured under static watered-up conditions with both systems showed no significant differences from those measured under dry ladder conditions (Table 4). This verified laboratory findings and observations with the new 134.2-kHz ISO-based juvenile interrogation system being installed at federal Columbia River Basin dams.

Initial field tests conducted in January-February showed that the PE-Flat system could read tags in air throughout both 2,116-cm^2 and 3,721-cm^2 modified orifices (modified meaning reinforcement bar cut and antenna housing installed). Representatives from DF tested an early prototype DF-Adult transceiver in January to determine how well their equipment operated and what further modifications were needed for it to work in fish ladders. Results showed limited tag read range in an unmodified orifice environment. DF had not believed that they needed to remove any reinforcement bar, though their tests quickly determined that the DF-Adult system required this modification. Therefore, for the second series of tests, the reinforcement bars were removed.

After making more electronic modifications to their equipment, DF retested their equipment in August. Results showed significant improvement in tag read ranges of the prototype DF-Adult system (Destron Fearing 1999). Tags could now be read throughout modified orifices measuring up to 3,721-cm^2 in both dry and watered-up ladder conditions. These results suggest that both of the PE-Flat and DF-Adult systems should be able to read PIT-tagged fish in the orifices found at Bonneville Dam.

Table 4. Read ranges (cm) taken in the upstream (away from weir wall) direction only for an extension-only antenna housing with a 63.5-cm antenna that was 13-cm wide. Measurements presented were made with the DF-Adult system under dry fish ladder and static watered-up ladder conditions in August 1999. The read range values were taken with an optimally oriented 12-mm Destron Fearing tag. The tag positions are the same as those in Table 1.

Tag position	Dry ladder	Static watered-up ladder
Center	26.0	26.0
C-NW	12.0	11.0
C-NE	14.0	13.5
C-SW	13.0	13.0
C-SE	13.5	16.0
S-S	20.0	20.0

By the end of FY99, NMFS had received an improved analog board from Patten Engineering (PE) for the open-architecture system. NMFS also received an analog board from RF Engineering that laboratory testing revealed to be unsatisfactory. NMFS identified some weaknesses on the board and sent it back to RF Engineering for more work. Thus, at the end of 1999, we had the DF-Adult and the PE/NMFS open-architecture systems. These prototype transceiver systems will be further developed during this fall and winter to improve the electronics and other features needed for reliable year-round operation at Columbia River Basin dams. Then more development tests will be conducted under dry ladder conditions when replacement antennas are installed in the Cascades Island ladder and in spring 2000 using PIT-tagged spring chinook salmon (*Oncorhynchus tshawytscha*) in the adult exit ladder.

NMFS also made RF noise measurements periodically at Bonneville Dam during 1999. Measurements made at the Cascades Island fish ladder showed that the ambient RF noise level was low (30-65 mVpp with the PE-Flat system) and relatively steady. In contrast, the RF noise levels in the adult exit ladder were higher (mostly ~125 mVpp) and more variable and did cause intermittent problems. More monitoring will be done in FY00 to help determine whether RF levels will impact the performance of the transceiver systems.

By the end of FY99, the transceiver development work had reached a point where a requirements document could be written, and this will be done during FY00. Furthermore, a multi-agency evaluation team will be formed in spring 2000 to produce a testing protocol to conduct a thorough evaluation of transceiver systems in the laboratory and field in late summer 2000, when steelhead and fall chinook salmon are available. As was done with the transceiver systems for juvenile salmon, we recommend that these systems be evaluated for tag-reading efficiencies with tagged fish.

For the fish tests, we recommend seeking reading efficiencies of >90% in individual 3,721-cm^2 orifices. We also recommend that the transceivers undergo environmental testing and other electronic bench tests in the laboratory to confirm that data throughput times and read ranges meet the requirements of the Columbia River Basin fisheries community. Tests should also be run in the laboratory in an EMI-shielded room to make consistent read-range measurements and to ensure repeatable reading-efficiency results. Furthermore, transceiver systems should be evaluated for ease of installation, reliability of operation and maintenance issues, diagnostic capabilities, and purchasing costs.

Systems Testing and Evaluation Techniques

Extended-range PIT-tag interrogation systems can only be tested to a limited extent in a laboratory setting, thus field tests are required to verify laboratory findings. Field tests are essential to determine the effects of antenna housings on hydraulics, the behavioral responses of fish to antenna systems, the reading efficiency with fish, the effect of ambient RF noise on tag detection, and the suitability of equipment for installation and long-term operation. All of these factors will be tested in the adult exit ladder during FY99 and FY00. This facility is a good test

site because it provides access to power and equipment, and can be dewatered throughout the year.

Determining tag-reading efficiencies for specific antennas installed in fish ladders is more complicated than for systems installed at the bypass/monitoring facilities for juvenile salmon because fish can follow multiple pathways through a fish ladder. For example, tagged test fish may choose not to migrate within a reasonable time period, fall back downstream, or choose an alternate migration path (i.e., weir overflow). Furthermore, since PIT-tagged fish are not visually recognizable from their non-tagged cohorts, visual observation records of fish passing through an antenna cannot be used in determining tag-reading efficiencies.

We critically need a method for determining how many tagged fish actually pass through or over a specific antenna. To obtain this information on fish passage in a ladder, the COE and NMFS did some preliminary work during FY99 with a bright pink streamer tag tested visually with various types of video cameras. To develop and evaluate techniques for determining reading efficiencies in fish ladders, NMFS conducted preliminary fish tests with steelhead released into the adult exit ladder that were tagged with visual and PIT tags. The COE Fisheries Field Unit installed overhead and underwater cameras in the vicinity of the two antenna housings installed. During a test, camera images of fish passing through the orifices and over the weir overflows were recorded on videotape.

Tests to develop systems-evaluation methods were conducted on 7 July and 4 August 1999. Twenty adult hatchery steelhead (*Oncorhynchus mykiss*) were used in each test. Fish were collected in the adult fish trap, anesthetized, tagged with a PIT tag, and then tagged with a visual tag. The fish were then allowed to recover from the anesthetic and released into the exit ladder.

During the July tests, different streamer materials and means of attaching the streamer to the Peterson disc tag were tested. Earlier testing had determined that the Peterson disk tag alone was not large enough to be the visual marker because of water turbidity and the speed of fish passing the camera view. Results indicated that a pink-colored streamer tag measuring 15-cm long by 2.5-cm wide constructed of nylon web provided a good visual marker that could be seen on the videotape (Fig. 3). A yoke of cotton thread was used to attach the streamer to the Peterson disc tag and to ensure equal strain and help maintain the tag in a dorsal position while the fish was swimming. The cotton thread would enable the streamer tag to easily break or rot off within days of attachment.

The August tests confirmed that this method of tagging was suitable for our purposes. The tests did show that PIT-tagged salmon could be detected in 2,116-cm^2 and 3,721-cm^2 orifices; however, the focus of these tests was to establish suitable evaluation methods and tag-reading efficiencies were not determined. Another observation pertinent to the design of future reading efficiency tests was that only a little over half of the fish tagged migrated through the adult exit ladder during the 8 hours after they were tagged.

Figure 3. Photo of a visually tagged chinook salmon.

The COE was not fully satisfied with the results of video detections of fish in orifices or over the weir overflows. They subsequently ordered new color cameras that will be evaluated in the fall and spring. One of the questions they are trying to answer is, What is the maximum turbidity level (measured with a Secchi disk) under which they can still distinguish the visual tags as fish swim through an orifice or over a weir overflow? This information is needed to help determine when it will be possible to run operational tests. (A summary of the COE report covering video monitoring of fish passing through fish ladder orifices is in the Appendix).

We recommend that during the spring-2000 development tests, the effectiveness of this method for confirming fish passage be determined. If these tests suggest that modifications are needed, then they should be made.

Development of a 134.2-kHz ISO-Based Flat-Plate System

In anticipation of replacing the existing 400-kHz flat-plate PIT-tag interrogation system for juvenile salmon at Bonneville Dam in 2000, NMFS began development work in 1997 on a 134.2-kHz ISO-based flat-plate system. NMFS and Patten Engineering have jointly worked on the 134.2-kHz flat-plate antenna and transceiver design. Patten Engineering is the contractor that successfully designed the 400-kHz flat-plate system presently deployed at Bonneville Dam.

Patten Engineering designed the first 134.2-kHz flat-plate antenna and transceiver prototype in early 1998. When NMFS tested it under actual operating conditions at Bonneville Dam in February 1998, the prototype system did not adequately read tags, as it was very sensitive to RF noise (Prentice et al. 1999). During the summer and fall 1998, the prototype antenna was modified in four ways to reduce noise sensitivity. First, since field disruption noises increase as antenna size increases, an array of four smaller antennas was designed to replace the one large antenna. Second, the small antennas were designed with a single winding rather than one for excitation and another for receiving. Third, measures were taken to reduce vibration in the fish-sampling box by installing nonmetallic wheels. And fourth, the transceiver circuitry design was improved to better filter out extraneous noise.

To test this redesigned flat-plate system, two antenna arrays were fabricated that consisted of four antennas each; in this arrangement, each antenna independently excited the tags and received their tag-code signals. The antennas were also potted to reduce internal vibration. The redesigned flat-plate system was temporarily installed and evaluated at Bonneville Dam in early November 1998 (Prentice et al. 1999). The 134.2-kHz system performed far better than the 400-kHz system: mean vertical read distance was 16.5 cm and tags could be read at angles greater than 45° (almost 90° in some locations on the antenna), while the 400-kHz system had a read distance of 10 cm and the ability to effectively read tags at angles no greater than 45°. The major disadvantage of the redesigned system was that it would require eight transceivers for the two antenna arrays instead of the single transceiver used by the present 400-kHz system; however, the system could be deployed using the existing cable-guide system and equipment racks.

A number of steps were completed during 1999 to ensure that the redesigned flat-plate system was ready for installation at Bonneville Dam. These steps included fabricating production electronic boards for the various transceiver components, adding a test tag that is periodically activated, and packaging the components into a single box. Before finalizing the designs for the transceiver boards, laboratory bench tests were performed that yielded significant improvements in the electronics. NMFS also evaluated several antenna designs in the laboratory. As a result, when the final boards were produced, the number of transceivers required for this application had decreased from eight to four. When the final transceivers were delivered in September, more tests were conducted at Bonneville Dam. The final combination yielded consistent reading ranges of 18-19 cm. We recommend going ahead with the planned installation scheduled for February 2000 and then evaluating the system with fish in March.

Continued Operation of the 400-kHz Pass-By (Flat-Plate) Interrogation System at Bonneville Dam

NMFS installed a 400-kHz pass-by (flat-plate) PIT-tag interrogation system for juvenile salmon in the downstream migrant channel at the Bonneville Dam First Powerhouse in 1996 (Nunnallee et al. 1998). This site is designated BVX in the PTAGIS database. The continued reliable operation of this system is essential to meet informational needs of fisheries investigators and managers in the Columbia River Basin. Studies that have used the data collected include the project *Relative Survival of Juvenile Salmon Passing Through the Spillway of The Dalles Dam, 1999* (Dawley et al. in prep); the hatchery PIT-tag *Comparative Survival Study* (Berggren and Basham 2000); and the ongoing Smolt Monitoring Program.

To ensure reliable system operation, we conducted maintenance on the pass-by (flat-plate) system at Bonneville Dam prior to and during the 1999 field season. Pre-season maintenance was completed by 15 March, but unlike in previous seasons, a pre-season fish test was not conducted. During the 1999 migration season, there were two 4-hour interruptions of data collection caused by operators inadvertently affecting the computer programs responsible for collecting tag codes and mailing the output data files to the PTAGIS database. The flat-plate system was retuned in June after the daily tests done with test tags indicated a decrease in performance. Test tags were also replaced with the latest generation of 400-kHz tags at this time. Overall, this was the most trouble-free year for the 400-kHz flat-plate system. The 400-kHz system was permanently removed in early November.

The Pass-Through PIT-Tag Interrogation System at Bonneville Dam

The pass-through system installed in the downstream migrant channel of the second powerhouse at Bonneville Dam in 1997 was removed at the end of the 1998 field season in preparation for the new bypass/monitoring facility being constructed by the COE. Most components of the new fish facility became operational during spring 1999, including the rebuilt collection channel, collection channel dewatering screens and trash sweeps, conveyance pipes, bypass and sample flumes, and outfall. In order to continue to interrogate all fish passing through the dam=s facilities for juvenile salmon, NMFS installed a temporary pass-through PIT-tag interrogation system for the 1999 field season (this was COE-supported work). This pass-through system is referred to as the B2J site in the PTAGIS database.

The pass-through system was evaluated for reading and gate efficiencies with 180 subyearling chinook salmon in April 1999. Prior to testing with fish, delay times for each of the four coils above the fish diversion gate were established with tests using tagged sticks. The open time for the rotational gate was set to 2 seconds for all four coils. For this evaluation, fish were released below the fish and debris separator. The four coils, in combination, read or detected all of the fish. Reading efficiencies for the individual coils ranged from 91.1 to 97.2% and the three-way rotational gate successfully diverted all 180 fish.

The temporary system made it possible for NMFS and U.S. Geological Service (USGS) to perform their evaluations of the parts of the new facility that had been completed. In these evaluations, the three-way diversion gate was over 98% efficient at separating targeted fish. There was, however, a problem with high numbers of bycatch during the peak of the season. The open time for the rotational gate was reduced to 1.2 seconds to decrease the numbers of incidental bycatch.

The new bypass/monitoring facility will be finished for the 2000 field season and the temporary 400-kHz system will be replaced by PSMFC with a 134.2-kHz ISO-based system in the fall. We recommend that the reading- and gate-efficiencies be determined for this new system.

Electromagnetic Field Emission Levels Measured at Bonneville Dam

To alleviate the health concerns raised by some COE employees at Bonneville Dam, NMFS contracted an independent engineer to make electromagnetic field emission measurements in April 1999. The contractor made measurements at the flat-plate BVX site, the BVJ sample site, the B2A site, and the temporary B2J site. The highest measured electrical and magnetic fields were found 20-cm above the flat-plate system (unlike under normal operational conditions, the flat plate was left active when it was raised out of the downwell); however, they were still far below levels associated with deleterious biological effects. Therefore, the contractor did not recommend any change in operations of the interrogation equipment nor did he

suggest adding any new safety precautions. The full report is available through BPA (Hatfield 1999).

The emission standards for the 134.2-kHz ISO-based equipment are similar to those for the 400-kHz equipment. While the 400-kHz Destron transceivers had never been tested by the FCC, Destron Fearing had its ISO-based stationary transceiver undergo the FCC tests, and it passed the tests. NMFS also did measurements on the prototype flat-plate system at both NMFS Manchester Research Station and Bonneville Dam. Based on those measurements, NMFS personnel are confident that the final flat-plate system will be safe for humans working in its vicinity.

Three-Way Side-to-Side Fish Diversion Gate

In 1997, NMFS constructed a prototype three-way side-to-side fish diversion gate measuring 25 cm in diameter (Fig. 3). The prototype was based on the two-way side-to-side diversion gates installed at Little Goose and Bonneville Dams. The general operating principle for these gates is that fish pass through a flexible hose section connected to a track, which is moved sideways to different diversion pathways.

The developers were concerned about hose fatigue with the longer side-to-side travel distance of the three-way diverter compared to the short lateral movement of the two-way diverter. This concern was valid, as it took 2 years to find a polyurethane hose formulation that could pass the 80,000-cycle test (Prentice et al. 1999). In 1998, the three-way side-to-side diversion gate passed all preliminary mechanical and biological tests (no fish were injured even when fish were aimed directly at a divider), and NMFS recommended that it be evaluated at a dam as the final step in its development.

For FY99, NMFS proposed to evaluate the three-way side-to-side fish diverter at either Lower Granite Dam or at Little Goose Dam. In early FY99, COE personnel indicated that a portion of the fish facility at Little Goose Dam was to be modified. The modifications would, in part, entail removing the two two-way prototype fish diversion gates and replacing them with a single three-way diverter. At a planning meeting held at the dam in 1999, it was decided by NMFS, COE, and PSMFC that the three-way side-to-side diversion gate would be the best diversion gate for the application because of its operation and maintenance attributes.

The COE plans to start facility modifications at the close of the 2000 field season. NMFS will fabricate the diverter in FY00. The installation and evaluation of the new diverter will take place during FY01 (this will be COE-supported work).

Figure 4. Diagram of a three-way side-to-side gate, a type of fish diversion gate.

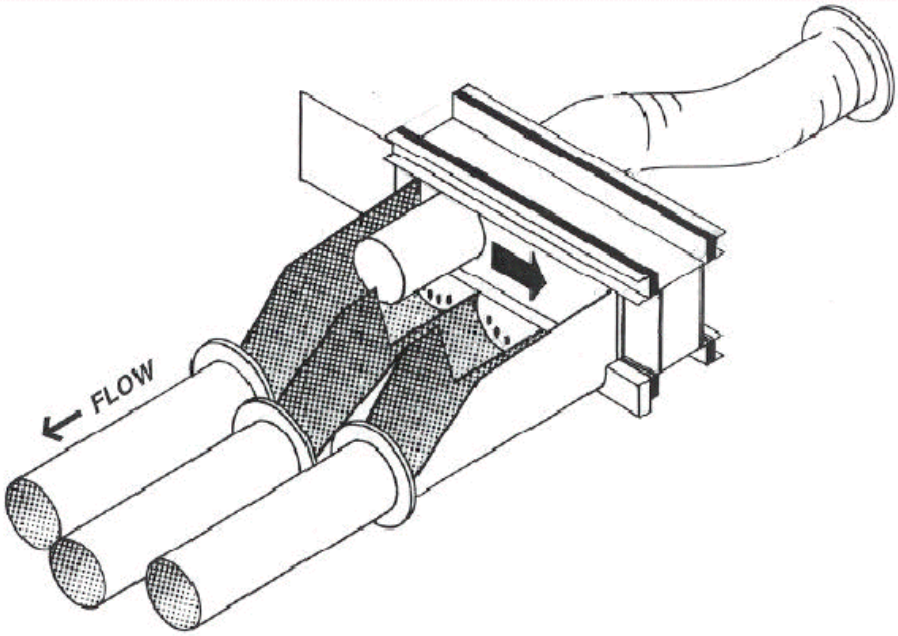

Separation-by-Code System: Computer Program (MULTIMON)

During 1992-1994, NMFS developed and evaluated a separation-by-code system (computer program and fish diversion gates) at their Manchester Research Station. The computer program controls the separation of targeted PIT-tagged fish from non-targeted tagged and non-tagged fish based on their individual tag codes. Since 1996, the computer program has been called MULTIMON. The development of MULTIMON is a joint project with Pacific Northwest National Laboratory (PNNL), whose personnel write the computer code. NMFS personnel oversee the development; test the program after modification; and collaborate with PSMFC personnel on technology transfer, maintenance, and assisting fisheries researchers. PNNL and NMFS personnel have worked together on the MULTIMON online help file (accessible while the program is running) and user guide.

The separation-by-code system was first tested at Lower Granite Dam in 1995; however, the computer program has changed a great deal since then. For example, in 1996, modifications were made to MULTIMON to facilitate the evaluation of 134.2-kHz ISO-based stationary transceiver systems. Thus, the program can now simultaneously function with both 400-kHz and 134.2-kHz transceivers. In addition, each year has seen modifications to make the program more user friendly and new features added to assist researchers in completing their studies. Furthermore, technological advances have changed computers dramatically since 1995, and we have taken advantage of these advances to improve MULTIMON.

Because research needs change each year, and new equipment (i.e., hardware, software, and electronic components) is installed or upgraded, we recognize that MULTIMON is unlikely to ever be totally static. Nonetheless, the program has reached a stage where NMFS and PSMFC agreed that after the conclusion of the 1999 field season, the primary responsibility of maintaining MULTIMON would be transferred to PSMFC. As during the 1998 field season, NMFS and PSMFC shared responsibility for administration during the 1999 season. NMFS will continue to support PSMFC in regard to MULTIMON during the 2000 season.

During the 1999 season, several research projects used the separation-by-code systems at Lower Granite, Little Goose, John Day, and Bonneville Dams. These research projects included a University of Idaho physiological study of fish at Lower Granite and John Day Dams. NMFS and the Yakama Nation used it for a physiological study at John Day Dam. The Fish Passage Center for its survival study used MULTIMON to direct 75% of its study fish to the raceways for transportation at Lower Granite and Little Goose Dams. The COE used MULTIMON to run several fish guidance studies at John Day Dam. NMFS and USGS used MULTIMON to aid in their evaluations of the new fish facility at Bonneville Dam.

Most of the computer program modifications for the 1999 migration season were to make the operations and maintenance of the program easier for PSMFC.

Platform

During the 1999 migration season, all of the dams monitored by PSMFC used MULTIMON. Most of these sites used the data-collection platform that includes two personal computers running MULTIMON in DOS that are networked to a SUN computer performing file management tasks in UNIX. However, several sites used the Windows 95 platform because it would allow PSMFC to use the software program LapLink by Traveling Software as a means to remotely check on the status of ISO-based transceivers. With the Windows 95 platform, a program called MAILER automatically sends the closed data files to the PSMFC server at Gladstone, Oregon, while MULTIMON continues to operate.

NMFS personnel led a thorough evaluation of the LapLink/Windows 95 platform at McNary Dam in February 1999. The LapLink/Windows 95 platform was directly compared to the DOS/SUN platform. There were no differences in data collection, in time required to read tags, or in time required to send out the command to activate the slide gates. Testing continued over the whole migration season at McNary Dam and the alternative platform was deemed acceptable. For the 2001 season, PSMFC is considering going with the LapLink/Windows 95 platform. The SUNs may be kept for running other operations and maintenance tasks performed by PSMFC at these sites.

In order to use the Windows NT operating system, which is more stable than Windows 95, PSMFC is following the PNNL/NMFS recommendation to start the process of writing a Windows-based MULTIMON application to replace the DOS-based application. This is necessary because unlike Windows 95, Windows NT will not let a DOS-based MULTIMON control the serial and parallel ports.

Easier Operations and Maintenance

To assist in the transfer of MULTIMON to PSMFC, modifications were implemented to make the program easier for PSMFC to operate and maintain, and easier to administer remotely. These modifications were designed to allow the program administrator and the operation and maintenance technicians not only to possibly determine the cause of a problem remotely, but also to potentially fix it remotely as well.

For example, because it is critical that the program continually collect tag data at the production sites, we made changes so that it would be possible to view the different setup files while the program remains actively collecting data. This allowed the technicians to check on the program locally, or remotely with LapLink, without stopping data collection. Similarly, they were able to check on how the individual ISO-based transceivers were performing without stopping data collection.

To help determine the potential cause of a problem remotely, the program was modified so that a copy of the Hardware setup file was included in one of the output data files collected

everyday. Copies of the Map setup file were already included in every output data file. A copy of the Database file is not sent, but the number of tag codes in the file is included in the header of every output data file. Thus, the program administrator and the operations and maintenance technicians can check on the status of multiple sites within a short time by looking at the output data files located on the PSMFC web site.

We also added unique symbols (e.g., $, &) in front of different types of data records (e.g., tag codes, alarm messages from the ISO-based transceivers) so that PSMFC could separate records that indicated events that needed immediate attention (e.g., an alarm that the current is too low for the transceiver to operate properly) and have this information automatically sent to the technicians.

In 1998, we discovered that setting up the program became complicated when several research projects were using the separation-by-code function simultaneously because their experimental designs called for collecting fish over multiple time periods that may or may not overlap. Therefore, for 1999, MULTIMON was modified so that it was easy to stop and start individual projects remotely.

The ability for MULTIMON to recognize remote commands that would enable PSMFC to manage its data files more effectively from its Gladstone office was added in 1997. The success of this approach in collecting files from the Lower Granite Dam experimental site made us realize that there were other tasks, such as updating tag databases, that would best be performed remotely. Unfortunately, the process for sending remote commands has been awkward; Laplink made this process easier, but MULTIMON had to be switched out of active data-collection mode to perform most of these tasks. Thus, for 2000, NMFS recommends that an interface program be written to make this process straightforward and keep the program actively collecting data.

Information Transfer, Technical Reviews, and Technical Support

NMFS actively collaborates with other agencies on PIT-tag related matters such as facility designs to accommodate PIT-tag systems, PIT-tag system maintenance, assistance in using prototype equipment and the MULTIMON computer program, and information transfer. Because NMFS personnel designed or co-developed many of the present PIT-tag system components, they are an important resource for providing technical support and training to ensure the reliable operation of PIT-tag technology throughout the Columbia River Basin. They also provide assistance in adapting PIT-tag technology for investigations into new areas. Activities that NMFS was involved in during the 1998-1999 reporting period are outlined below.

- Provided assistance to PSMFC regarding the repair of PIT-tag interrogation systems, ancillary equipment such as fish diversion gates, and setting up MULTIMON at Columbia River Basin dams.

- Assisted investigators from several fisheries agencies in setting up the MULTIMON program to accommodate their separation-by-code requirements.

- Participated in the 1999 Bring Your Kids to Work Day at NMFS by providing demonstrations of PIT-tag equipment. This event was a community outreach program highlighting NMFS research activities.

- Provided information on the Columbia River Basin PIT-tag system to numerous national and international investigators. For example, consultation was provided to investigators from Sweden and Iceland on their use of PIT-tag systems for solving fisheries problems.

- Designed and fabricated electronic components for the towed tunnel array used in the Columbia River estuary by another COE-sponsored NMFS project (Ledgerwood et al. 1997). We also assisted in the design of the tunnel array.

- Designed a portable 400-kHz pass-by PIT-tag interrogation system for detecting tags deposited by birds in locations not accessible by jeep (Ryan et al. in press). The system allowed two individuals to be working more than 60 m apart.

- Conducted tests with the belt-test apparatus at the Manchester Research Station to help demonstrate that radio tags and 400-kHz PIT tags did not interfere with each other. More tests will be run in FY00 to investigate the 134.2-kHz PIT tags and a new generation of radio tags.

ACKNOWLEDGMENTS

Support for this research came from the region's electrical ratepayers through the Bonneville Power Administration. We are grateful to personnel from the Walla Walla and Portland Districts of the U.S. Army Corps of Engineers and to Pacific States Marine Fisheries Commission staff; without their timely assistance, some of our field work could not have been completed.

We also acknowledge NMFS employees Richard Frazier, James Simonson, and William Wassard for their valuable assistance with the installation of antenna housings and other equipment into the fish ladders at Bonneville Dam. We thank Lyle Gilbreath for tagging fish used in the studies at Bonneville Dam. In addition, we would like to express our appreciation to personnel from the NMFS Pasco and Seattle Mechanic Shops and the technicians from the NMFS Sand Point Electronics Shop.

REFERENCES

Berggren, T. J., and L. R. Basham. 2000. Comparative survival rate study (CSS) of hatchery PIT tagged chinook: status report for migration years 1996-1998 mark/recapture activities. Report to Bonneville Power Administration, Contract 8712702, 45 p. plus appendices. (Available from Fish Passage Center, 2501 SW First Ave., Suite 230, Portland, OR 97201.)

BPA and COE (Bonneville Power Administration and U.S. Army Corps of Engineers). 1996. Memorandum of understanding between U.S. Army Corps of Engineers and U.S. Department of Energy Bonneville Power Administration for the purpose of establishing the respective roles and responsibilities of the parties for the design, construction, operations, and maintenance of a passive integrated transponder (PIT) tag program at COE Columbia and Snake River hydroelectric projects. (Available on the internet at http://www.efw.bpa.gov:88/ColumbiaBasin/FishAndWildlifeProjects/BPA/FWP/198331900/APTOC/Installation/Documents/1996MOU.doc)

Dawley, E. M., C. J. Ebel, R. F. Absolon, B. P. Sandford, and J. W. Ferguson. In prep. Relative survival of juvenile salmon passing through the spillway of The Dalles Dam, 1999. Report to U.S. Army Corps of Engineers, Portland District, Contract W66QKZ83437725, 55 p. plus appendices. (Available from Northwest Fisheries Science Center, 2725 Montlake Blvd. E., Seattle, WA 98112-2097.)

Destron Fearing. 1999. Adult detection field test report. Report to Bonneville Power Administration, 33 p. (Available from Bonneville Power Administration, P.O. Box 3621, Portland, OR 97208-3621.)

Hatfield, J. B. 1999. Electric and magnetic field measurements at National Marine Fisheries Bonneville Dam PIT-tag detectors. Report to Bonneville Power Administration and National Marine Fisheries Service, 6 p. (Available from Bonneville Power Administration, P.O. Box 3621, Portland, OR 97208-3621.)

Ledgerwood, R. D., E. M. Dawley, B. W. Peterson, and R. N. Iwamoto. 1997. Estuarine recovery of PIT-tagged juvenile salmonids from the Lower Granite Dam transportation study, 1996. Report to U.S. Army Corps of Engineers, Contract E8960100, 54 p. plus appendices. (Available from Northwest Fisheries Science Center, 2725 Montlake Blvd. E., Seattle, WA 98112-2097.)

NMFS (National Marine Fisheries Service). 1995. Reinitiation of consultation on 1994-1998 operation of the federal Columbia River power system and juvenile transportation program in 1995 and future years. Endangered Species Act, Section 7 consultation, Biological opinion. (Available from NMFS Northwest Regional Office, Hydropower Program, 525 NE Oregon Street, Suite 500, Portland, OR 97232.)

NMFS (National Marine Fisheries Service). 1998. Operation of the Federal Columbia River Power System including the Smolt Monitoring Program and the Juvenile Fish Transportation Program: A Supplement to the Biological Opinion signed on March 2, 1995, for the same projects. Endangered Species Act, Section 7 consultation, Steelhead Supplemental Biological Opinion. (Available from NMFS Northwest Regional Office, Hydropower Program, 525 NE Oregon Street, Suite 500, Portland, OR 97232.)

Nunnallee, E. P., E. F. Prentice, B. F. Jonasson, and W. Patten. 1998. Evaluation of a flat-plate PIT-tag interrogation system at Bonneville Dam. Aquacult. Eng. 17: 261-272.

Prentice, E. F., S. L. Downing, E. P. Nunnallee, B. W. Peterson, and B. F. Jonasson. 1999. A study to determine the biological feasibility of a new fish tagging system (1997-1998). Report to Bonneville Power Administration, Contract DE-A179-84BP11982, Project 83-319, 42 p. (Available from Northwest Fisheries Science Center, 2725 Montlake Blvd. E., Seattle, WA 98112-2097.)

Ryan, B. A., J. W. Ferguson, R. D. Ledgerwood, and E. P. Nunnallee. In press. Detection of passive integrated transponder tags from juvenile salmonids on piscivorous bird colonies in the Columbia River Basin. N. Am. J. Fish. Manage.

APPENDIX:

Executive Summary from Evaluation of Prototype Adult Salmonid PIT-Tag Detector Inserts with Underwater Video Cameras at Cascades Island Fishway

EXECUTIVE SUMMARY*

Adult Passive Integrated Transponder (PIT) tag detection systems are being developed by the National Marine Fisheries Service (NMFS) to monitor adult salmonid passage through fishways of Columbia River hydropower projects. Installation of adult PIT-tag housings at Columbia River dams is required by the NMFS 1998 Supplemental Biological Opinion Incidental Take Statement 3.c. in response to recent Endangered Species Act (ESA) listings of Columbia and Snake River salmonid stocks. The U.S. Army Corps of Engineers (COE) Fisheries Field Unit (FFU) is working in cooperation with NMFS to monitor adult passage with video technology to determine the best areas to place PIT-tag detection systems within fish ladders at Bonneville Dam. We intend to evaluate fish behavior as they ascend fish ladders prior to and following installation of antenna systems the fish ladders, and to evaluate the effectiveness of the prototype transceiver systems.

In 1999, we (FFU) used underwater video technology to study passage ratios and behavioral impacts due to the presence of detectors in Bonneville fishways, specifically, to determine orifice and overflow section passage proportions at two Cascades Island fishway weirs, one of which contained a single, inactive orifice PIT-tag antenna housing. At Cascades Island, proportional analyses of 1999 spring, summer, and fall teleost passage ratios showed significant difference between the number of teleosts passing through orifices with and without PIT-tag antenna housings ($P < 0.0001$ upstream with $n = 3798$; $P < 0.0001$ downstream with $n = 888$). Upstream passage was higher for the orifice with the PIT-tag antenna housing than for the orifice without the housing, showing a preference for this route. However, downstream passage was also higher for the PIT-tag antenna housing than for the orifice without the housing. We are not too concerned that fish were falling back through the PIT-tag antenna housing at a higher rate. This is because the fish were not avoiding the orifice with the PIT-tag antenna housing (our primary concern). The housing used in 1999 was the most obtrusive design (extending five inches upstream into the pool), and the next four weirs upstream had prototype antenna housings, which may have set up some hydraulic conditions that are not typical for these weirs. In addition, the absence of data before the antenna housings were installed makes it difficult to determine whether or not the proportions at the weir with the antenna housings were typical for that weir. Fish passage proportions using overflow weirs in the fall were 6% at weir number 52 and 7% at weir number 53.

Working in conjunction with NMFS in the Adult Fish Collection and Monitoring Facility (AFC&MF) at Bonneville=s Second Powerhouse (P2), we performed an experiment on 5 August 1999 to determine the ability of the underwater video cameras to detect visual Peterson disc and

---

* Executive summary is from Stansell Robert. J. Sprague, C. R., and Wertheimer, R. W. In prep. Evaluation Of Prototype Adult Salmonid PIT-Tag Detector Inserts with Underwater Video Cameras at Cascades Island Fishway Bonneville Dam, 1999. The study was performed by the U.S. Army Corps of Engineers and is available from Bonneville Power Administration (P.O. Box 3621, Portland, OR 97208-3621).

colored streamer tags placed on PIT-tagged steelhead. We also began to develop methodologies to evaluate reading efficiencies for the PIT-tag interrogation systems through the use of video and visually detectable streamer tags. To determine visual detection capabilities of cameras and to compare to PIT-tag detector readings, various types of orange streamers were attached to the dorsal fins of PIT-tagged salmonids. Twenty fish were tagged and released into the exit section of the AFC&MF. Two weirs were set up with orifice PIT-tag antenna housings and underwater cameras. Eleven fish passed one weir and ten were detected by the PIT-tag detector (90.0%) and ten were seen visually. Twelve fish passed the second weir and eleven were seen by the PIT-tag detector (91.7%) and all were seen visually.

Lamprey passage was also monitored during all sample periods for unusual behavior or avoidance of the orifices with antenna housings. From viewing videos, passage did not appear to be hindered by the housings, but it did appear that some lamprey attached to the antenna housing orifice floor more often than they did in the unmodified orifices. This is possibly because the antenna housings have smoother surfaces than the normal rough concrete found in the unmodified orifices. Lamprey passage through all orifices appeared labored compared to teleost passage, possibly due to their lesser ability to negotiate the swift currents through orifices in fishways designed for salmonid passage.

We searched the scientific literature for studies that addressed orifice and overflow weir passage to see if our evaluation showed any similarities to studies already conducted. The search resulted in limited information on the subject. References to pertinent information are provided in the report.

We conclude from this 1999 pilot study that salmonid passage was not adversely impacted by the presence of an inactive PIT-tag antenna housing in a weir orifice in the Cascades Island fishway. We feel underwater color video technology is effective in verifying passage of PIT- and visually-tagged salmonids passing through an active PIT-tag interrogation system in the AFC&MF fishway. Furthermore, we feel that results using video technology will be useful in determining placement of PIT-tag detectors in adult fishways.

If prototype adult PIT-tag detectors are shown to have accurate reading efficiencies and not to impede or alter fish passage, the systems can be installed in Columbia and Snake River hydropower project fishways to allow monitoring of adult salmonid passage without undue stress on the fish.