CZES Coastal Zone and Estuarine Studies

COLUMBIA RIVER OIL SPILL STUDY June-July 1978

by
Theodore H. Blahm, Joseph T. Durkin,
George R. Snyder, Travis C. Coley,
and Robert L. Emmett

EPA

December 1980

COLUMBIA RIVER OIL SPILL STUDY

JUNE/JULY 1978

by

Theodore H. Blahm
Joseph T. Durkin
George R. Snyder
Travis C. Coley
Robert L. Emmett

Contract Report to

Environmental Protection Agency

Appropriation No. EPA-78-D-X-0390

NOAA
National Marine Fisheries Service
Northwest and Alaska Fisheries Center
Coastal Zone and Estuarine Studies Division
2725 Montlake Boulevard East
Seattle, Washington 98112

December 1980

INTRODUCTION

The lower Columbia River and its estuary are a part of the migration route of the anadromous fish of the Columbia River Basin. It is economically important that we strive to preserve, maintain, and possibly enhance the biological relationships (production) that occur in the estuary and river. Man's activities through estuarine and river development has tended to degrade these relationships and create a delicate biological balance that can be disrupted by what may be considered a minor factor; such as an oil spill into the Columbia River.

The purpose of this report is to outline the conduct and results of a short-term study done subsequent to an oil spill (Columbia River) near Portland, Oregon.

During the evening of 27 June 1978, the Toyota Maru #10 ruptured a fuel tank while hauling anchor near Columbia River Mile (CRM) 102.5. Between 30 and 58 thousand gallons of Bunker C (#6) fuel oil were released into the Columbia River (Figure 1).

The National Marine Fisheries Service's (NMFS), major concern was the potential impact of the oil on juvenile chinook salmon (approximately 80 million) that were in the peak of their downstream migration; the oil could have affected them from CRM 102.5 to the ocean. Also of concern was the potential impact on other fish and aquatic organisms.

The Environmental Protection Agency (EPA) provided funding for NMFS to conduct a study to determine if oil had impacted aquatic organisms at various sites downstream from the spill.

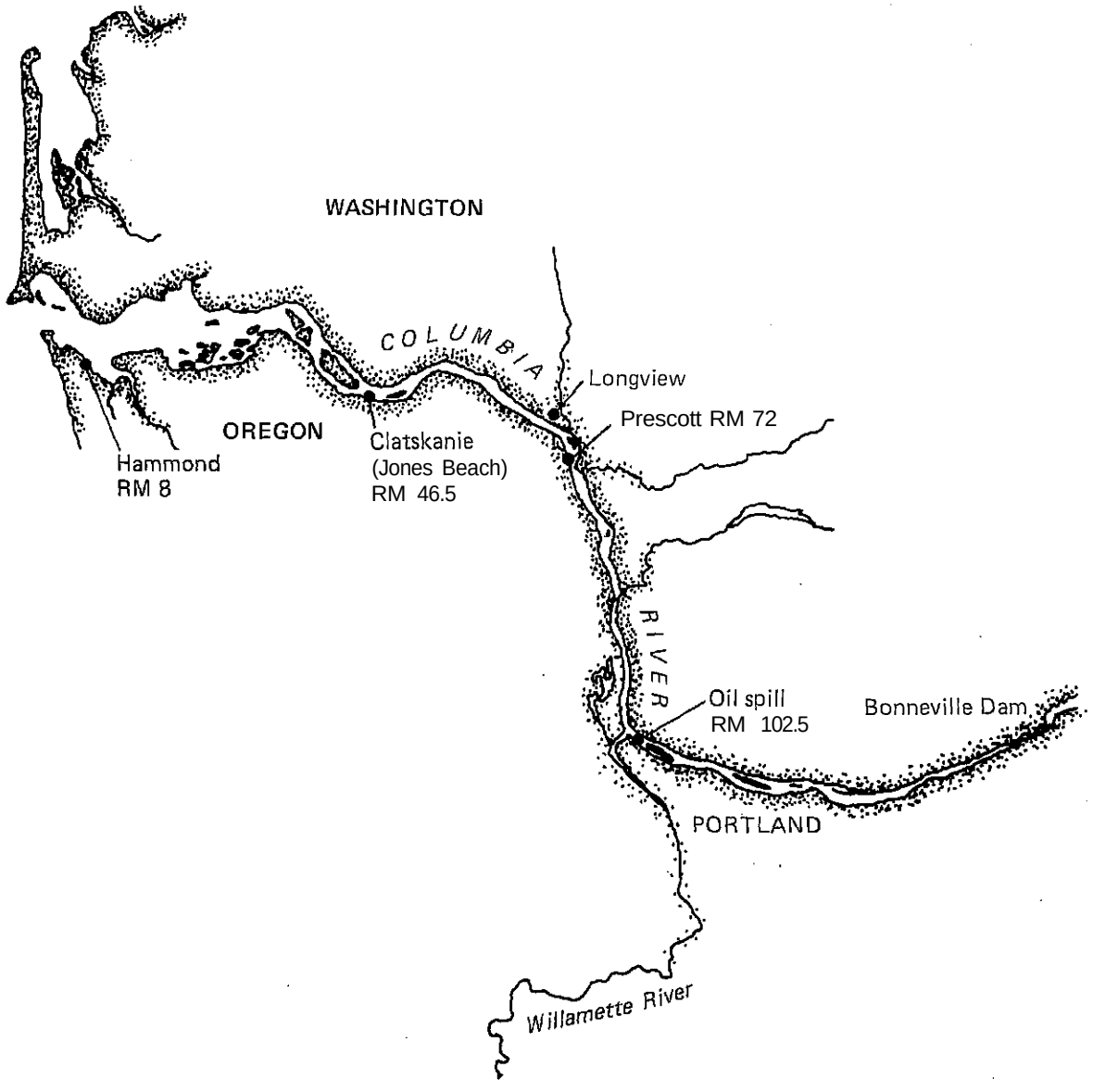

Figure 1--Oil spill site near the confluence of the Willamette River; also shown are the NMFS field stations at which beach seine (fish) samples were taken for petroleum hydrocarbon analysis.

Dr. George R. Snyder coordinated and negotiated the study proposal with personnel of EPA. The resulting letter of agreement was signed on 3 August 1978 by the Director of the NMFS, Northwest and Alaska Fisheries Center, and the Regional Administrator of EPA. The agreement was designated by EPA document control number R00188 and appropriation number EPA-78-D-X-039 issued by letter on 16 August 1979.

Dr. Ted H. Blahm (NMFS) was responsible for overall conduct of the study; close contact was maintained with Mr. John Sainsbury of EPA in Seattle, Washington.

Assessment of the biological effect of the oil spill was based on the results of petroleum hydrocarbon incidence in finfish, sediment, and benthos taken from the Columbia River between CRM 105 and 4. General observations were made by several competent biologists and described herein as supportive material.

NMFS equipment and personnel involved in sample collection were based at three locations on the lower Columbia River: Prescott, Clatskanie, and Hammond, Oregon (Figure 1). The three facilities are satellite stations of the Coastal Zone and Estuarine Studies Division (CZES), Northwest and Alaska Fisheries Center, Seattle, Washington.

SAMPLE COLLECTION AND ANALYSIS

Finfish

Eighteen samples of juvenile salmonids (20 per sample) and samples of nonsalmonids (of varying numbers) were collected with a 100-m beach or purse seine (Sims and Johnson 1974) (Durkin 1979) at the locations and dates shown in Table 1. The fish were individually wrapped in clean aluminum foil and frozen within 1 or 2 hours of capture. The 25 samples

Table 1...Location, species, and date of 25 fish samples taken from the Columbia River for petroleum hydrocarbon analysis of flesh.

Location CRM [a]	Position	Fish Species		Date	Seine Type [c]	Sample Number
		-SALMONIDS-				
14.0	Mid-channel	Fall Chinook	*Oncorhynchus tshawytscha*	6/30/78	P	05-254
14.0	Mid-channel	Fall Chinook		6/30/78	P	05-255
14.0	Mid-channel	Fall Chinook		7/03/78	P	05-219
46.5	Mid-channel	Fall Chinook		6/30/78	P	05-299
46.5	Mid-channel	Fall Chinook		6/30/78	P	05-230
46.5	Wash. Shore	Fall Chinook		6/30/78	B	05-231
46.5	Wash. Shore	Fall Chinook		6/30/78	B	05-232
46.5	Ore. Shore	Fall Chinook		6/30/78	B	05-233
46.5	Ore. Shore	Fall Chinook		6/30/78	B	05-234
78.0	Kalama Wash. Shore	Fall Chinook		6/30/78	B	05-253
78.0	Kalama Wash. Shore	Fall Chinook		7/03/78	B	05-218
101.0	Wash. Shore	Fall Chinook		7/02/78	B	05-216
105.0	Ore. Shore	Fall Chinook		7/02/78	B	05-217
105.0	Ore. Shore (Clean Net)[b]	Fall Chinook		7/08/78	B	05-252
46.5	Mid-channel	Spring Chinook		6/30/78	P	05-256
46.5	Mid-channel	Spring Chinook		6/30/78	P	05-257
46.5	Mid-channel	Coho	*Oncorhynchus kisutch*	6/30/78	P	05-258
46.5	Mid-channel	Coho		6/30/78	P	05-259
		-NON-SALMONIDS-				
18.0	Mid-channel	Peamouth	*Mylocheilus caurinus*	7/03/78	P	05-298
46.5	Mid-channel	Peamouth		7/01/78	P	05-301
105.0	Ore. Shore (Clean Net)	Peamouth		7/08/78	B	05-299
105.0	Ore. Shore	Peamouth		7/03/78	B	05-300
46.5	Mid-channel	Carp	*Cyprinus carpio*	7/01/78	P	05-302
105.0	Ore. Shore (Clean Net)	Carp		7/08/78	B	05-303
105.0	Ore. Shore	Carp		7/03/78	B	05-304

a/ Columbia River Mile
b/ A new unused net was employed for sample collection
c/ P=purse seine and B=beach seine

listed in Table 1 were subsequently shipped (frozen) to the Energy Resources Company, Inc., 185 Alewife Brook Parkway, Cambridge, Massachusetts 02138 for hydrocarbon analysis.

All samples were analyzed by gas chromatography (GC). The samples indicating the presence of petrogenic compounds were further subjected to GC and mass spectrophotometry (MS) investigtion. Each fish was rinsed with distilled water prior to analysis. This step avoided any possible oil contamination which could have resulted from the seines. The method of extraction involved refluxing each fish homogenate in a mixture of methanol/0.5N KOH/distilled water for a period of 4 hours. The samples were then extracted with hexane, concentrated, and fractionated by column chromatography, and the aromatic and aliphatic hydrocarbons were identified by GC and GC/MS.

The identification and determination of the degree of oil contamination present in each sample was concluded from the following criteria:

1. n-alkane distribution of f_1 chromatograms, GC
2. aromatic series of ringed compounds present (i.e., napthalenes, phenanthrenes) in the f_2 fraction, GC, GC/MS

Some fish captured near the spill area (other than those used for GC/MS analysis, which were captured with beach and purse seines) were taken by bottom trawl. Trawl caught fish were used to assess diversity and abundance.

Subsamples of fish catches were preserved for stomach content analysis by methods outlined by Durkin et al. (1979).

Fishing during June 1978 prior to the oil spill was in relation to a dredging study being done for the Corps of Engineers (Blahm et al. 1979). This sampling provided an index of species composition and abundance before the oil spill. Those fish captured during July were taken after the oil spill.

All fish captured were examined, identified to species, weighed to the nearest gram, and measured to the nearest mm fork length. Identification was based on Carl, Clemens, and Lindsey (1959); Hart (1973); and Scott and Crossman (1973).

Benthic and Sediment

Benthic invertebrates and bottom sediment samples were collected at 28 sites (Figure 2 and Table 2) in the lower Columbia River between CRM 105 and 4.5.

Samples 1 and 2, CRM 105 were upstream from the site of the oil spill; samples 3, 4, and 5 were at the spill site. Samples 6 to 9 were immediately downstream and were located in an area where NMFS had recently taken benthic samples during a previous study not related to the oil spill. Samples 15 to 28 were in the Columbia River estuary and were located at sites used during previous studies.

Replicate benthic samples were collected at each of the 28 sampling stations with a 0.1 m^2 Ponar gravity activated grab sampler. The contents of each grab were washed in a sieve box containing a 0.595-mm (#30) screen. Organisms retained by the screen were preserved and were subsequently sorted, enumerated, and identified to genus using Pennak (1953) and Ward and Whipple (1966).

Sediment samples were collected conincidentally with benthos sampling. A coring device which measured 3.8 cm inside diameter was used to collect

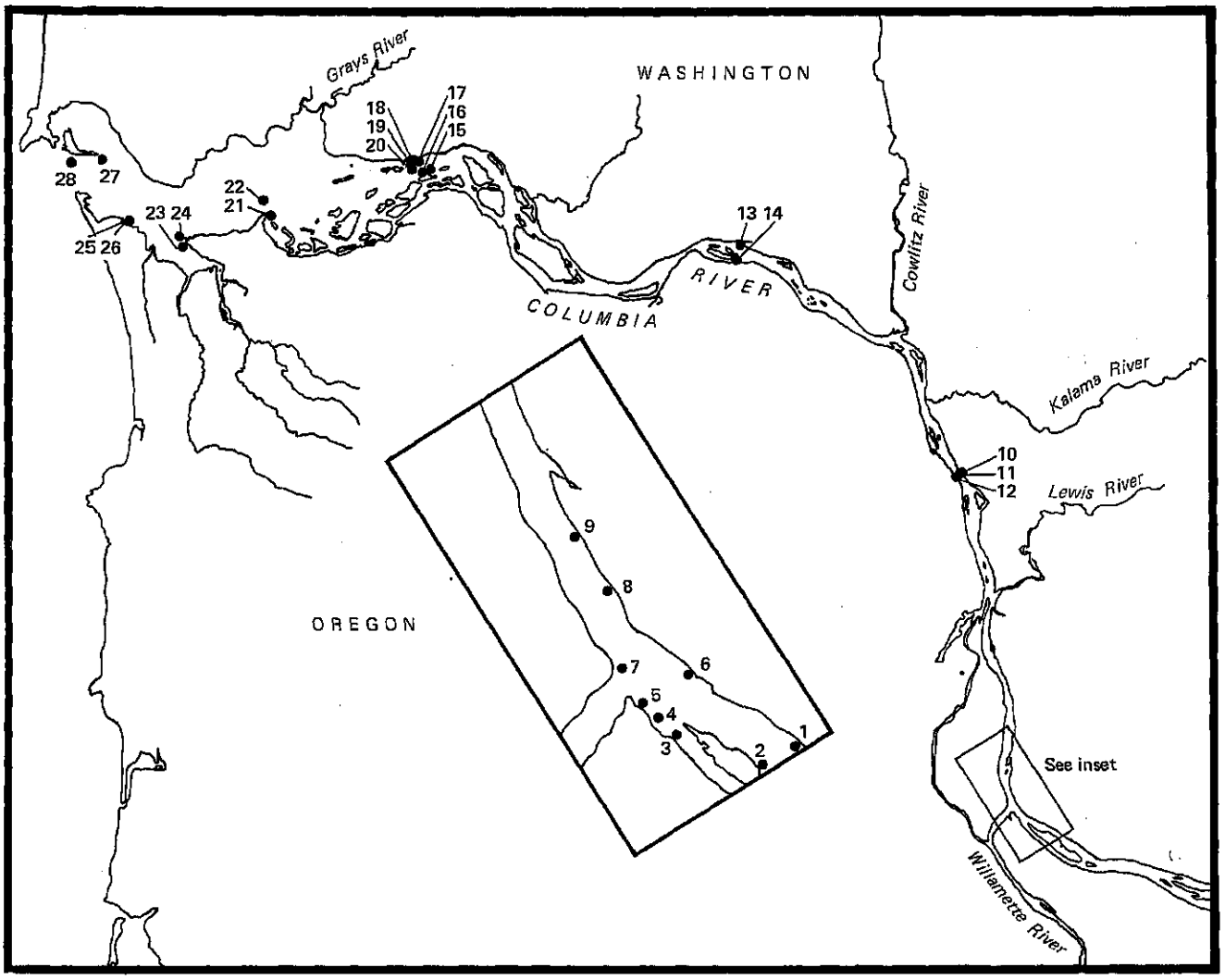

Figure 2...Location of 28 sites on the Columbia River used for benthos and sediment sampling. Exact locations are outlined in Table 2.

Table 2...Location of 28 sampling stations used during the Toyota Maru #10 oil spill study.

Site Number		Latitude	Longitude
	Reference Samples at BPA Power Lines		
#1	CRM 105.0 Wash.	45°38'25"N	122°42'45"W
#2	CRM 105.0 Ore.	45°38'11"N	122°43'03"W
	Upstream of Kelly Point		
#3	CRM 102.3 Ore.	45°38'44"N	122°45'09"W
#4	CRM 102.1 Ore.	45°38'51"N	122°45'10"W
#5	CRM 101.9 Ore.	45°38'56"N	122°45'30"W
	Upstream of Willamette River		
#6	CRM 101.6 Wash.	45°39'19"N	122°45'13"W
	Downstream of Willamette River		
#7	CRM 100.9 Wash.	45°39'50"N	122°45'38"W
#8	CRM 100.2 Ore.	45°40'18"N	122°46'21"W
#9	CRM 99.6 Wash.	45°40'55"N	122°46'06"W
	Near Kalama, Washington		
#10	CRM 77.0 Wash.	45°59'24"N	122°50'15"W
#11	CRM 76.5 Mid-channel	45°51'25"N	122°50'37"W
#12	CRM 76.4 Ore.	45°59'38"N	122°50'27"W
	Jones Beach		
#13	CRM 47.1 Wash.	46°09'14"N	123°17'50"W
#14	CRM 46.5 Ore.	46°08'25"N	123°18'36"W
	Between Pillar Rock and Jim Crow Creek		
#15	CRM 29.4 N. Woody Island	46°15'06"N	123°32'33"W
#16	CRM 29.1 N. Woody Island	46°14'52"N	123°32'55"W
#17	CRM 29.0 Jim Crow Creek	46°15'30"N	123°33'03"W
#18	CRM 28.3 Jim Crow Creek	46°15'20"N	123°33'49"W
#19	CRM 28.3 Jim Crow Creek	46°15'25"N	123°33'49"W
#20	CRM 28.3 Jim Crow Creek	46°15'27"N	123°33'49"W

Table 2...Continued

Site Number				Latitude	Longitude
			Tongue Point, Oregon		
#21	CRM	19.4	Mott Basin (Tongue Point)	46°11'46"N	123°45'14"W
#22	CRM	17.8	Tongue Point	46°13'02"	123°46'16"W
			Young's Bay, Oregon		
#23	CRM	12.7	Inner Young's Bay	46°10'03"N	123°51'21"W
#24	CRM	11.4	Outer Young's Bay	46°10'54"N	123°52'35"W
			Tansy Point, Oregon		
#25	CRM	10.5	Alder Cove	46°11'12"N	123°54'55"W
#26	CRM	10.2	Shrimp Dock	46°11'23"N	123°55'11"W
			Baker Bay, Washington		
#27	CM	6.5	N. of Chinook Jetty	46°15'13"N	123°56'10"W
#28	CRM	4.5	Sand Island	46°16'00"N	123°59'55"W

sediment samples to a depth equaling the penetration of the benthic sampler. Sediment samples taken from the Ponar dredge were measured for depth, thus providing a gauge on which to establish uniform penetration of the dredge into the substrate during each grab. Each sample was placed in a methanol rinsed container, identified, and sent to the Northwest Testing Laboratories for analysis. Particle size was determined by standard sieve and pipette procedures as described by Weber (1973). Percent total volatile solids or residue loss on ignition was determined by standard methods (American Public Health Association 1975). Infra-red spectrophotometry was used to qualitatively determine the presence or absence of Bunker C fuel residue in each sample.

RESULTS OF PETROLEUM HYDROCARBON ANALYSIS

The Energy Resources Company, Inc. completed their analysis of the 25 fish samples (18 salmonid and 7 nonsalmonid) in January 1979.

Using GC and Gc/MS (Table 3 and 4) they concluded:

1. Components correlating with Bunker C oil were exhibited in three samples:[2/]

   a. 05-217
   b. 05-253
   c. 05-298

2. Oil was found, but in a much less significant degree in samples:

   a. 05-218
   b. 05-234
   c. 05-252

   The aromatic hydrocarbons present in these samples cannot be

[2/] Samples are identified in Table 1.

necessarily attributed to Bunker C oil. The levels and distribution of the hydrocarbon constituents must be viewed with respect to the aromatics within the control sample.

3. The remaining samples did not have detectable levels of petroleum hydrocarbons.

The samples that proved positive for Bunker C oil components are indicated on Tables 3 and 4. Sample number 05-217 was taken 2.4 miles upstream of the oil spill; the samples taken upstream were to be used as references. Contamination of the reference sample possibly resulted from either the fish being contaminated near the spill and subsequently moving upstream or the oil moving upstream during tidal reversal (Snyder and McConnell 1973). The latter appears to be most likely considering that Sample Station 1 and 2 sediments were both positive for Bunker C, Table 5.

Sample number 05-253 (salmonid) was captured near Kalama, Washington, at CRM 77 approximately 26 miles downstream from the spill; whereas, sample number 05-298 (nonsalmonid) was taken 84.5 miles downstream. The salmonids are moving downstream during their migration which makes it impossible to say they were contaminated where they were captured; however, a nonsalmonid would generally stay in the immediate area near where it had been affected with the exception of behavior changes which will be discussed later. Whereas only 12% of the fish flesh samples were contaminated, they ranged from near the spill site to the estuary.

The sediment samples, taken at the locations outlined on Table 2, indicated the presence of Bunker C oil components at all but 4 of the 28 sites, Table 5. The data from this portion of the study was qualitative in nature, e.g., presence or absence. This leads to speculation that possibly

Table 3...Aliphatic and aromatic fraction from fish flesh samples taken from Columbia River subsequent to the Toyota Maru #10 oil spill.

TOYOTA MARU SALMON SAMPLES

Sample	Dry Wt G	F_1 (Aliphatic) yg/g dry wt. Resolved	Unresolved	Total	F_2 (Aromatic) yg/g dry wt. Resolved	Unresolved	Total	Description
05-216	15.14	92.35	89.73	182.08	12.03	13.49	22.52	NC
*05-217	18.31	18.91	28.72	47.63	2.06	6.84	9.44	Contaminated
05-218	21.84	13.85	9.04	22.89	1.05	5.38	6.43	Traces of oil
05-219	26.15	49.78	135.70	185.70	7.09	2.33	9.42	NC
05-229	9.84	56.61	108.01	164.62	151.72	247.72	399.33	NC
05-230	6.82	44.09	123.67	167.76	109.46	241.69	274.12	NC
05-231	7.09	30.07	92.78	123.50	261.24	141.51	402.75	NC
05-232	8.06	51.02	91.00	142.02	243.02	409.23	649.52	NC
05-233	8.28	28.71	84.66	113.37	338.53	138.53	477.06	NC
05-234	7.02	62.20	212.58	274.78	77.74	253.47	306.71	F2 possible naphthalenes
05-252	31.27	31.07	87.74	118.81	160.59	56.31	216.90	F_1-smooth n-alkane distribution, large UCM--F_2-possible naphthalenes
*05-253	24.04	68.58	224.88	293.46	84.46	190.12	274.58	F_1-smooth n-alkane distribution, large UCM--F_2-naphalenes present
05-254	46.10	30.32	75.78	106.10	255.73	292.73	547.94	F_2-possible naphthalenes
05-255	65.99	8.20	39.60	47.58	147.58	98.60	246.18	NC
05-256	48.52	20.75	42.26	63.01	640.03	104.35	744.38	NC
05-257	62.50	16.00	34.51	50.51	35.46	19.57	55.03	NC
05-258	28.77	22.90	62.71	85.07	133.99	14.42	148.41	NC
05-259	59.01	18.38	41.58	59.96	502.60	254.96	757.56	NC
*05-298	9.93	31.83	380.18	412.01	44.27	131.93	176.20	Contaminated with petroleum

*Contaminated; positive identification of Bunder C oil.

Table 3——Continued

Sample	Dry Wt G	F_1 (Aliphatic) yg/g dry wt. Resolved	Unresolved	Total	F_2 (Aromatic) yg/g dry wt. Resolved	Unresolven	Total	Description
05-299	12.50	22.43	131.43	153.86	59.05	33.64	92.69	NC
05-300	15.40	7.02	96.13	103.15	5.85	26.88	32.73	NC
05-301	31.18	6.98	124.11	131.09	25.37	113.84	139.21	NC
05-302	24.55	36.92	667.62	704.62	50.88	195.26	246.14	NC
05-303	23.93	9.93	30.47	40.30	20.25	9.61	29.86	NC
05-304	22.29	12.08	186.05	198.13	7.19	40.16	47.35	NC

Table 4...Aromatic constituents from fish flesh samples taken from Columbia River subsequent to Toyota Maru #10 oil spill - 27 June 1978.

AROMATIC CONSTITUENTS OF SAMPLES AS DETERMINED BY GC/MS

(yg/g dry weight)

Sample #		Naphthalenes	Phenanthrenes	Dibenzothiopenes	Fluorenes
05-298	Peamouth RM 18 Mid channel 7/3/78	3.74 a/	1.95	0.79	0.46
05-301	Chub RM 47 Mid channel 7/1/78	0.30	ND b/	ND	ND
05-302	Carp RM 47 Mid channel 7/1/78	0.05	ND	ND	ND
05-303	Carp RM 105 Ore. shore Clean net 7/8/78	0.02	0.01	ND	ND
05-304	Carp RM 105 Ore. shore Oily net 7/3/78	0.01	0.06	ND	ND
05-234	Chinook RM 47 Ore. shore 6/30/78	1.21 a/	1.40	0.08	0.23
05-252	Chinook RM 105 Ore. shore Clean net 7/8/78	0.61 a/	0.03	0.005	ND
05-253	Chinook RM 77 Kalama Beach 6/4.0/78	5.46 a/	5.40	1.43	1.10

a/ Contaminated with oil components.
b/ ND=not detected.

-Table 4. . .Continued

AROMATIC CONSTITUENTS OF SAMPLES AS DETERMINED BY GC/MS

(µg/g dry weight)

Sample #		Naphthalenes	Phenanthrenes	Dibenzothiopenes	Fluorenes
05-254	Chinook RM 14 Estuary 6/30/78	0.08	0.09	ND b/	0.02
05-217	Salmon juveniles RM 105 Ore. shore 7/2/78	1.75 a/	0.13	ND	ND
05-218	Salmon juveniles Kalama Beach 7/3/78	0.61	0.92	ND	0.002

a/ Contaminated with oil components.
b/ ND=not detected.

Table 5...Presence (+) or absence (-) of Bunker C fuel oil components at 28 locations on the Columbia River, see Figure 2 for site locations.

Site Number	
#1	+
#2	+
#3	+
#4	+
#5	+
#6	+
#7	+
#8	+
#9	+
#10	+
#11	+
#12	+
#13	+
#14	+
#15	-
#16	+
#17	-
#18	+
#19	+
#20	+
#21.	+
#22	+
#23	-
#24	+
#25	+
#26	+
#27	-
#28	+

the levels of Bunker C residue are very low and could be the result of minor spills which occur frequently in the river.

OIL COMPONENTS FOUND IN AND ON THE RIVER BOTTOM

Bunker C oil components were found in the sediments from CRM 105 to 4.5. Globules of Bunker C residue were dragged off of the bottom with the leadlines of the nets at all beach seine sites (Table 1). Residue was also found 13 inches deep in the beach sand near CRM 72. The oil in and on the bottom of the river and deep in the beach sand could not be removed, and subsequently it could cause alterations of the aquatic environment (from leaching, etc.) resulting in a degrading biological affect of some degree and consequences.

FINFISH AND DIVERSITY

Trawl Evaluation CRM 98 to 102

A series of 12 tows, 5 minutes in duration, were made between CRM 98 and 102 on 16 May, a second series of 12 on 16 and 17 May (Blahm et al. 1979), and a third series of 12 on 6 July following the oil spill by the Toyota Maru #10. Finfish species caught, their number, and combined weights are shown for each trawl series in Table 6 a, b, and c. The Arabic numbered tows were made in an upstream or easterly direction, while tows with Roman numerals were downstream in a westerly direction. Finfish catches were low during all the series; however, the number caught a week after the oil spill was only half that found in the two earlier surveys. Just four species were captured in the series following the spill, whereas each previous survey had eight species. Also, only five of twenty-four tows took no fish prior to the spill whereas six of twelve tows were empty

Table 6...Fish numbers and weights in five minute trawl catches at KM 98 to 107, May and July 1978.

Part a Portland Harbor Dredge Disposal Evaluation (Blahm et al. 1979)

May 16	1	2	3	IID[a]	4	5	6	VD	7	8	9	VIID	Total No.	Total Gr.Wt.
Pacific lamprey	-	-	-	1	-	-	-	-	-	2	-	2	5	21
White sturgeon	1	1	-	-	-	-	1	1	-	-	-	2	6	2913
Chum salmon	-	-	-		1	-	-	-		-	-	-	1	1
Spring chinook salmon	1	-	-	-	-	-	-	-	-	-	-	-	1	43
Fall chinook salmon	-	-	1	-	-	-	1	-	1	-	-	-	2	13
Finescale sucker	-	-			-	-	-	-	-	-	-	-	1	981
Western speckled dace	-	-	-	-	-	-	-	1	-	-	-	-	1	17
Coast Range sculpin	-	-	-	-	-	-	-	-	-	1	-	1	2	1
Totals	2	1	1	1	1	0	2	2	1	3	0	5	19	3990

Part b Portland Harbor Dredge Disposal Evaluation (Blahm et al. 1979)

May 16-17	1	2	3	IID	4	5	6	VD	7	8	9	VIID	Total No.	Total Gr.Wt.
Pacific lamprey	-	2	1	-	-	1	-	1	-	2	-	-	7	33
White sturgeon	-	-	-	1	2	-	-	-	-	-		2	5	2779
Chum salmon	-	-	-	-	-	-	-	-	-	1	-	-	1	1
Coho salmon	-	1			-	-	-	1	-	-	-	-	2	53
Sockeye salmon	-	1	-	-	-	-	-	-	-	-	-	-	1	9
Fall chinook salmon	1	2	-	-	4	-	-	-	-	-	-	-	3	24
Western speckled dace	-	-				-	-	-	-	-	-	-	4	51
Prickly sculpin	-	-	1	-	-	-	-	-	-	-	-	-	1	33
Totals	1	6	2	1	6	1	0	2	0	3	0	2	24	2983

Part c Portland Harbor - Oil Spill Evaluation

July 6, 1978	1	2	3	IID	4	5	6	VD	7	8	9	VIID	Total No.	Total Gr.Wt.
Pacific lamprey	-	1	-	-	-	-	-	-	-	-	-	-	1	1
White sturgeon	1[a]	-	-	1	1	1[a]	-	-	-	-	-	-	4	1438
Carp	-	-	-	-	-	-	-	-	-	-	1	-	1	3130
Prickly sculpin	-	-			3	-	-	-	-	-	1	-	4	132
Totals	1	1	0	1	4	1	0	0	0	0	2	0	10	4701

Part d Hayden Island - Upstream Oil Spill Evaluation RM 107

July 6, 1978	1	2	Total No.	Total Gr.Wt.
White sturgeon	17	10	27	9709
Carp	3	1	4	-
Prickly sculpin	4	1	5	168
Pacific crayfish	3	1	4	-
Totals	27	13	40	9877

a/ Larval sturgeon

following the spill. Gram weight comparisons between the three trawl series did not indicate any change, though weights were influenced in July by the capture of a large adult carp.

Trawl Evaluation at Pillar Rock, CRM 26 to 28

Trawl tows were conducted at CRM 26 to 28 nearly a year prior to the oil spill (August 1977) to evaluate finfish species, numbers, and biomass at a channel widening project (Durkin et al. 1979). These initial six 5-minute trawl tows were made in an upstream or easterly direction. The catch results from the sampling are averaged to compare with the tows made following the oil spill (30 June and 11 July 1978) Table 7. The 1977 survey revealed the presence of seven fish species with an abundance of 286 individuals and a weight of 4,734 grams.

A series of three trawl tows was made at these same three sites in June at the same time oil from the spill was present in the estuary (to CRM 18); these tows indicated four finfish species present, but numbers consisted of 14 individuals with a total weight of 2,436 grams (Table 7b).

The three sites were revisited on 11 July and a series of tows were made once again (Table 7c). Only one finfish species was captured at this time, and it was represented by 16 individuals weighing 191.7 grams. The near disappearance of demersal finfish species at CRM 26 to 28 could be related to the oil spill, but sufficient background information on normal changes in abundance that occur throughout the year was not available. Therefore, one cannot positively say that the apparent reduction in numbers shown by sampling on 11 July was due to the spill.

Purse Seine Evaluation

A total of six purse seine sets, 5 minutes in duration, sampled pellagic fish in the Columbia River between CRM 99 and 102. Site location

Table 7...Numbers of demersal fish captured in the Pillar Rock area RM 26 with an 8 m trawl towed for 5 minutes (Durkin et al. 1979). The catch reflects species available before and after an oil spill by the Toyota Maru #10. All collections were made during the flood tide.

Part a (before spill)

18 August 1977	Dredge Site-Jim Crow Point		Disposal Site-Jim Crow Point		Comparison Site-Woody Island Channel		Totals	
	No.	Wt.	No.	Wt.	No.	Wt.	No.	Wt.
White sturgeon	1.0	586.0	--	--	--	--	1.0	586.0
American shad	--	--	1.0	1.5	--	--	1.0	1.5
Peamouth	1.5	132.0	8.5	705.0	5.0	474.0	15.0	1311.0
Largescale sucker	--	--	--	--	1.0	263.0	1.0	263.0
Prickly sculpin	10.0	49.0	24.5	117.0	155.0	1299.0	190.0	1465.0
Staghorn scuplin	--	--	1.0	6.5	1.5	23.0	2.5	29.5
Starry flounder	6.0	34.0	18.5	289.0	51.0	755.0	75.5	1078.0
Totals a/	18.5	801.0	53.5	119.0	214.0	2814.0	286.0	4734.0

Part b (after spill)

30 June 1978	Dredge Site-Jim Crow Point		Disposal Site-Jim Crow Point		Comparison Site-Woody Island Channel		Totals	
	No.	Wt.	No.	Wt.	No.	Wt.	No.	Wt.
White sturgeon .	1.0	321.0	1.0	195.0	--	--	2.0	2271.0
Prickly sculpin	3.0	1.0	4.0	1.5	--	--	7.0	1.5
Starry flounder	--	--	2.0	14.0	1.0	1.0	3.0	15.0
Peamouth	--	--	2.0	149.0	--	--	2.0	149.0
Totals	4.0	322.0	9.0	2114.0	1.0	1.0	14.0	2436.5

Part c (after spill)

11 July 1978	Dredge Site		Disposal Site		Comparison Site		Totals	
	No.	Wt.	No.	Wt.	No.	Wt.	No.	Wt.
Prickly sculpin	6.0	5.5	3.0	1.6	7.0	184.6	16.0	191.7
Totals	6.0	5.5	3.0	1.6	7.0	184.6	16.0	191.7

a/ Average of two tows.

is presented in Blahm et al. (1979). The catch results during early June showed eight species of fish, primarily salmonids, were present (Table 8a). The combined total catch of six purse seine sets was 457 fish, an average of 79 per set; these weighed 9,293 grams. The numerically dominant species were fall chinook salmon subyearlings and coho salmon yearlings. However, sockeye salmon, steelhead, and spring chinook salmon were also common. Fish weights were dominated by steelhead and coho salmon.

A week after the oil spill occurred in late June, the same six sites were resampled with the purse seine. This series produced only three fish species all of which had previously been captured in the earlier June series, and the catch was again dominated by salmonids (Table 8b).

The combined purse seine catch after the oil spill produced 84 fish, an average of 14 fish per sample effort. The weight of the fish was 1675 grams; this was considerably less than found prior to the spill. The mean length and weight of all fish captured in July was greater than in June indicating growth of the species. It should be noted, when examining these tables, the near absence of yearling salmonids in July is considered normal since most enter the ocean by this time. The fall chinook salmon subyearlings would not be included in this category since they are found in the river until September or October.

SURVEYS OF BENTHIC INVERTEBRATE INFAUNA

Samples of benthic invertebrates were collected between CRM 99 and 102 on May 1978 prior to the spill (Blahm et al. 1979). The twenty 0.1 m^2 benthic grabs indicated a density of 329.7 per m^2 at this time. A total of 10 groups of organisms were found (Table 9); the numerically important

Table 8...Purse seine catches by species, number, and weight (grams) found in six sets at Portland Harbor below CRM 99 to 102 on 5 June 1978 prior to an oil spill (Blahm et al. 1979), and July 1978 following oil spill.

Part a

	Area 1		Area 2		Area 3		Area 4		Area 5		Area 6		Total		Percent		Mean	
Species	No.	Wt.	No.	Wt.	No.	Wt.	No.	Wt.	No.	Wt.	No.	Wt.	No.	Wt.	No.	Wt.	Length	Wt.
Pacific lamprey	--	--	1	538	--	--	--	--	--	--	--	--	1	538	0	6	--	538.0
Coho	71	1219	30	654	12	244	9	144	6	93	20	308	148	2662	32	29	125.8	18.0
Sockeye	33	432	11	147	13	195	4	45	9	110	3	41	73	970	16	10	116.2	13.3
Spring chinook	9	170	8	134	3	44	3	37	3	44	4	63	30	492	7	5	116.9	16.4
Fall Chinook	60	276	26	127	16	69	8	41	2	9	39	167	151	689	33	7	81.9	4.6
Residual fall chinook	2	76	3	111	--	--	--	--	--	--	--	--	5	187	1	2	178.2	37.4
Steelhead	26	1948	1	187	10	788	2	95	2	203	5	261	46	3482	10	37	203.2	75.7
Peamouth	1	104	2	169	--	--	--	--	--	--	--	--	3	273	1	3	217.0	91.0
Totals	202	4225	82	2067	54	1340	26	362	22	459	71	840	457	9293	100%	99%		

Purse seine catches by species, number, and weight found in six sets at Portland Harbor between CRM 99 and 102, July 1978 following the oil spill.

Part b

Coho	--	--	--	--	--	--	1	42	--	--	--	--	1	42	1	3	173.0	42.0
Fall chinook	7	69	19	131	2	11	22	224	15	125	10	113	75	673	89	40	95.6	9.0
Peamouth	2	263	1	134	1	148	--	--	2	140	2	275	8	960	10	57	224.9	120.0
Totals	9	332	20	265	3	159	23	266	17	265	12	388	84	1675	100%	100%		

groups were bivalves, diptera, amphipods, copepods, and oligochaetes. Invertebrates were more abundant in the upstream sampling sites.

The area was resampled in July two weeks following the oil spill and additional samples were taken between CRM 99.6 and 105.0. These were not the same sites sampled earlier but are provided to show the types of organisms and their densities (Table 9). The results show amphipod density is considerably greater than those found weeks earlier though diptera were about the same. Bivalves were less than a third as abundant as in the previous survey; however, the overall benthic density of 784.5 m^2 in July was twice that found in the first survey.

Benthic samples taken at CRM 76 (3) and CRM 46 (2) were taken after the oil spill and ranged from 155 to 2795 invertebrates per m^2. The numerical variation indicated patchy distribution of amphipods, the most abundant organism.

Direct comparisons of benthic invertebrates counts at 14 sites between CRM 4.5 and 29 are presented in Table 10. A 0.05 m^2 Ponar dredge was used for all sampling, and the organisms were treated in the same manner throughout the study. Initial sampling was made in June 1977 (Blahm et al. 1979), a comparable time period. Following the oil spill, the sites were revisited on 11 July, and a third survey was made on 16 February 1979. At 12 of the 14 sites, fewer invertebrates were found after the spill than indicated in earlier sampling. The two sites where more invertebrates were indicated had low densities, and the numerical differences were not great. The majority of the 12 sites with fewer organsims had substantial reductions. The follow up survey during February 1979 indicated increased numbers were present at 10 of the 17 sites; indicating recovery and/or a seasonal effect.

Table 9...Comparison of benthic invertebrate numbers taken with a 0.1 m^2 Ponar dredge at Portland Harbor, CRM 99 to 105, May 1978 (Blahm et al. 1979) and July 1978 subsequent to Toyota Maru #10 oil spill.

	Average per m^2 20 sample sites	Average per m^2 9 sample sites
	May 15, 1978	July 12, 1978
Nematoda	1.4	—
Polychaeta	—	21.7
Oligochaeta	16.3	2.2
Bivalvia	164.9	46.1
Gastropoda	1.1	—
Amphipoda	32.3	628.3
Cladocera	15.3	0.6
Copepoda	24.2	—
Diptera	73.2	85.0
Arachnida	0.3	0.6
Other	0.3	—
Total	329.7	784.5

Table 10...Benthic invertebrate (number per m^2) comparison between June 1977, July 1978, and February 1979 based upon samples taken with a 0.05 m^2 Ponar dredge in the Columbia River estuary between CRM 7 and CRM 29.

	#28[a/] River Mile 4.5 Baker Bay			#27 River Mile 6.5 East of Chinook Jetty			#26 River Mile 10.2 Pacific Shrimp Dock			#25 River Mile 10.5 Alder Cove			#24 River Mile 11.4 Outer Youngs Bay		
	June 1977	July 1978	Feb. 1979	June 1977	July 1978	Feb. 1979	June 1977	July 1978	Feb. 1979	June 1977	July 1978	Feb. 1979	June 1977	July 1978	Feb. 1979
Nemertea		40	20		20	100	20	40	20	20	20				
Nematoda	280 [b/]				20	40	120			860			20		
Polychaeta	60	20	300	120			60	220	40	100	340	20	320	100	60
Oligochaeta	580			20	40				300	40	40	80	40		
Cirripedia	2800	20													
Bivalvia	100		600	80	40				900	320		1200	80		920
Mysidacea	20														
Amphipoda	160	340	280	60	520		280	20	20	570	40	20	40	220	340
Decopoda		60			20			20			20				
Cladocera		20					260	20		280	20				
Diptera															
Other				40		20	1240	20	120	860	20	180			20
Total	4000	500	1200	320	660	160	1980	340	1400	3050	500	1500	500	320	1340

a/ Stations indicated on Figure 2 and Table 2
b/ Number per m^2

Table 10...Continued

	#23 River Mile 12.7 Inner Youngs Bay			#22 River Mile 17.8 Tongue Point			#21 River Mile 19.4 Mott Basin			#20 River Mile 28.3 Jim Crow Point			#19 River Mile 28.3 Jim Crow Point		
	June 1977	July 1978	Feb. 1979	June 1977	July 1978	Feb. 1979	June 1977	July 1978	Feb. 1979	Aug. 1977	July 1978	Feb. 1979	Aug. 1977	July 1978	Feb. 1979
Nematoda	4840	460	60	1600	60	920	920	240	180		20	420		20	1940
Polychaeta	420	920	580				20								
Oligochaeta	8500	3460	5200			120	23180	11980	5700			160			480
Bivalvia	20		300	120			420	80		40	40		180	600	80
Mysidacea	20						20	60	20						
Amphipoda	14680	3340	220	300	160	180	840	380	300	20		20	1400		20
Decapoda		20													
Cladocera				160	140	20		20		160	100			160	
Copepoda	740	460	1260	40	120	2300	4560	660	1500	20	100	5180		160	20740
Diptera	120						420	660	20	20	60	60	300	380	460
Turbellaria						60									
Other		20	420	20					20						
Total	29340	8680	8040	2240	480	3600	30380	14080	7740	260	320	5840	1880	1320	23230

Table 10...Continued

	#18 River Mile 28.3 Jim Crow Point			#17 River Mile 29.0 Jim Crow Point			#16 River Mile 29.1 Woody Island Channel			#15 River Mile 29.3 Woody Island Channel		
	Aug. 1977	July 1978	Feb. 1979	Aug. 1977	July 1978	Feb. 1979	Aug. 1977	July 1978	Feb. 1979	Aug. 1977	July 1978	Feb. 1979
Nematoda			320			180			40			
Polychaeta	20					20	80	140		60		20
Oligochaeta	60	20	320	60		420	20	280	60			100
Bivalvia	20	60	20	80	120	80	220	100	60	500	880	
Mysidacea				20	20			20				
Amphipoda	360		20	620			4420	280		6460	80	80
Cladocera	80	120		200	160		120	100	1000		100	
Copepoda	40	100	3100									
Diptera	100	100	140	20		4740	20	20	100		100	20
Turbellaria												
Other												
Total	680	400	3920	1000	460	5440	4880	940	1260	7020	1160	220

Table 11 is a compilation of numbers per meter squared (m^2) of the benthic organisms taken during July 1978 from the Columbia River at the 28 sampling stations shown on Figure 2. Most of the organisms are utilized as food by finfish in the river.

A subsample of 60 amphipods (Corophium) (collected near Kalama, Washington) were covered with an oil residue. The material was removed from the organisms, analyzed and subsequently identified as Bunker C residue; these benthic organisms were adversely affected which would reduce the available food for both nonsalmonid and salmonid species.

FINFISH FOOD UTILIZATION

Data from a study not related to the oil spill (Blahm et al. 1979) showed that 11 of 23 fish examined had empty stomachs. Of those having food, five had indistinguishable digested material. The six fish with identifiable contents were white sturgeon (4), and fall chinook salmon (2). Sturgeon consumed the amphipods; Corophium spinicorne, and Anisogammarus ssp., chironomid (diptera) larvae. The fall chinook salmon consumed C. spinicorne and diptera.

Pelagic sampling provided substantially greater numbers of fish for stomach analysis than the bottom trawl. Of 254 fish examined, 81% (205) had food in their stomach. The largest group examined were chinook salmon, and they consisted of 34 spring yearlings, 74 fall subyearlings, and 4 fall residual yearlings. There were 92 chinook salmon with food in their stomachs; an incidence of over 81%. Food items were primarily insects and amphipods, with some cladoceran and copepods. This agrees with the report by Craddock, Blahm, and Parente (1976). Spring chinook salmon preferred hymenoptera whereas fall chinook salmon preferred diptera; however, both

Table 11...Benthic organisms per m^2 captured at 28 locations in the Columbia River from mile 105 to 4, July 1978.

Site Number[a/]	Amphipoda	Oligochaeta	Bivalve	Diptera	Polychaeta	Cladocera	Nematoda	Copepoda	Nemertia	Decapoda	Mysidaca
1	430		10	325	50						
2	175		20	3	10						
3	25	15	10	325	5						
4	125		10		65						
5	1025	5	30	35	35	5					
6	470	5	15	5	30						
7	265		150	30							
8	520		70	40							
9	2620		100								
10	2295		175	305	20						
11	2115		195	255		5					
12	95		145	80	55						
13	75		50	25		5					
14	1830	5	95	60		10					
15	280	280	100	100	140	100		20			20
16	80		880	60		100		100			
17			120	160		160					20
18			40	60		100	20	100			
19			600	380		160		160			
20		20	160	100		120					
21	380	11980		660		20	240				60
22	160					140	60	120			
23	3340	3460			860	460	660			40	
24	220				100						
25	40	40			240	20			20	20	
26	20				220	20		20	40	20	
27	560	20	40				20		20	20	
28	340							40	40	20	
Total	17485	15830	3015	3008	1830	1425	1000	560	120	120	100

a/ See Figure 2

stocks consumed a wide variety of organisms (Figure 3). Coho salmon diets were comparable with chinook salmon (Figure 4). The 42 sockeye salmon juveniles consumed eggs as well as insects (Figure 5), but most food items were in various stages of digestion. Steelhead preferred coleoptera and hymenoptera, but also consumed other insects (Figure 6) (Blahm et al. 1979).

Comparison of finfish food consumption immediately before and after the oil spill was restricted to juvenile fall chinook salmon. They were the only salmon stock occurring in sufficient numbers during both June and July sampling surveys. The juvenile chinook salmon stomach contents are presented graphically in percentage by number, weight, and frequency of occurrence together with an index of relative importance (IRI), Figure 7.

The early June survey revealed most chinook salmon were feeding since there was an 84% incidence of food found in the stomachs of 50 fish examined. Numerically preferred food items were the insect groups diptera and hymenoptera, but most of the prey weight consisted of digested material. The IRI total of 6902 (Figure 7) also indicated several species of amphipods were consumed.

The stomach contents of 47 juvenile chinook salmon examined after the oil spill revealed an 83% feeding incidence. The percent of digested insects weight was considerably greater than found for a similar category in the June survey. The insect groups coleoptera and diptera were numerically the most important items consumed, but they appeared in less than one third of the stomachs. The data suggest most available food organisms (particularly insects) probably occur upstream from the Portland Harbor area (CRM 99 to 102) shown by the high incidence of digestion found

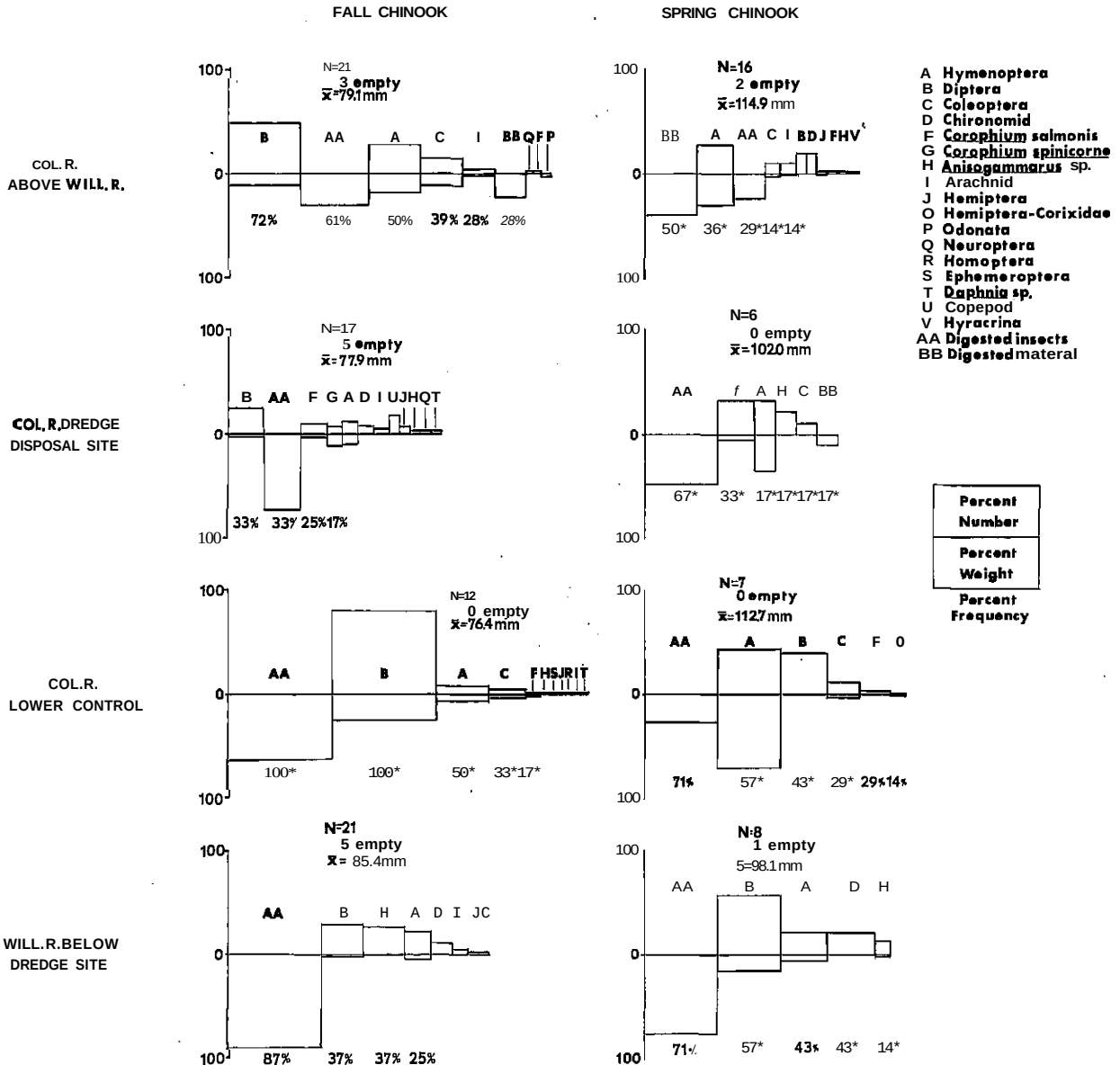

Figure 3...The index of relative importance (IRI) of food items consumed by juvenile spring and fall chinook salmon captured with a purse seine in the Columbia and Willamette River (Blahm et al. 1979).

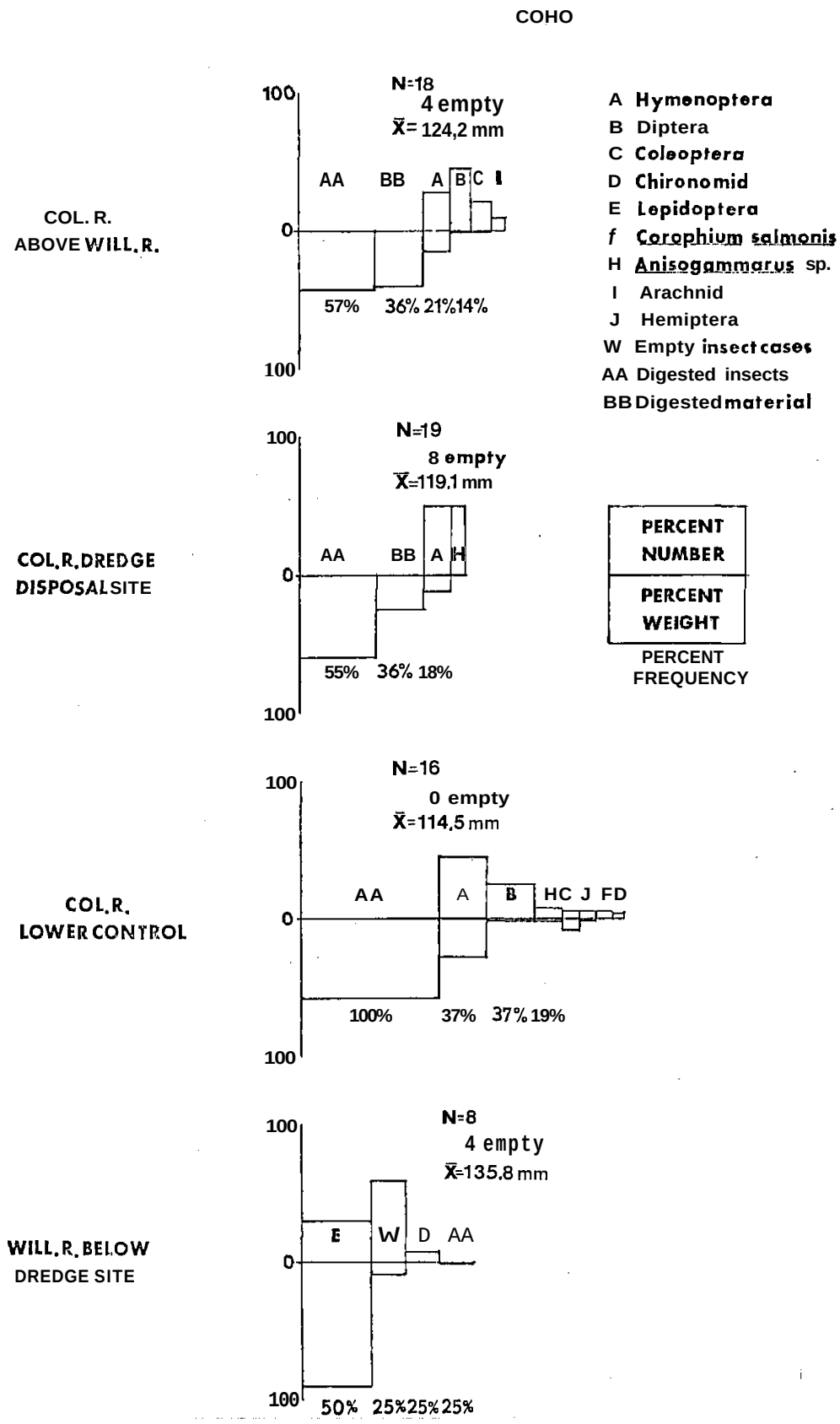

Figure 4...The diet of 46 juvenile coho salmon as indicated by an index of relative importance (IRI). The coho were captured with a purse seine in the Columbia and Willamette Rivers July 1978 (Blahm et al. 1979).

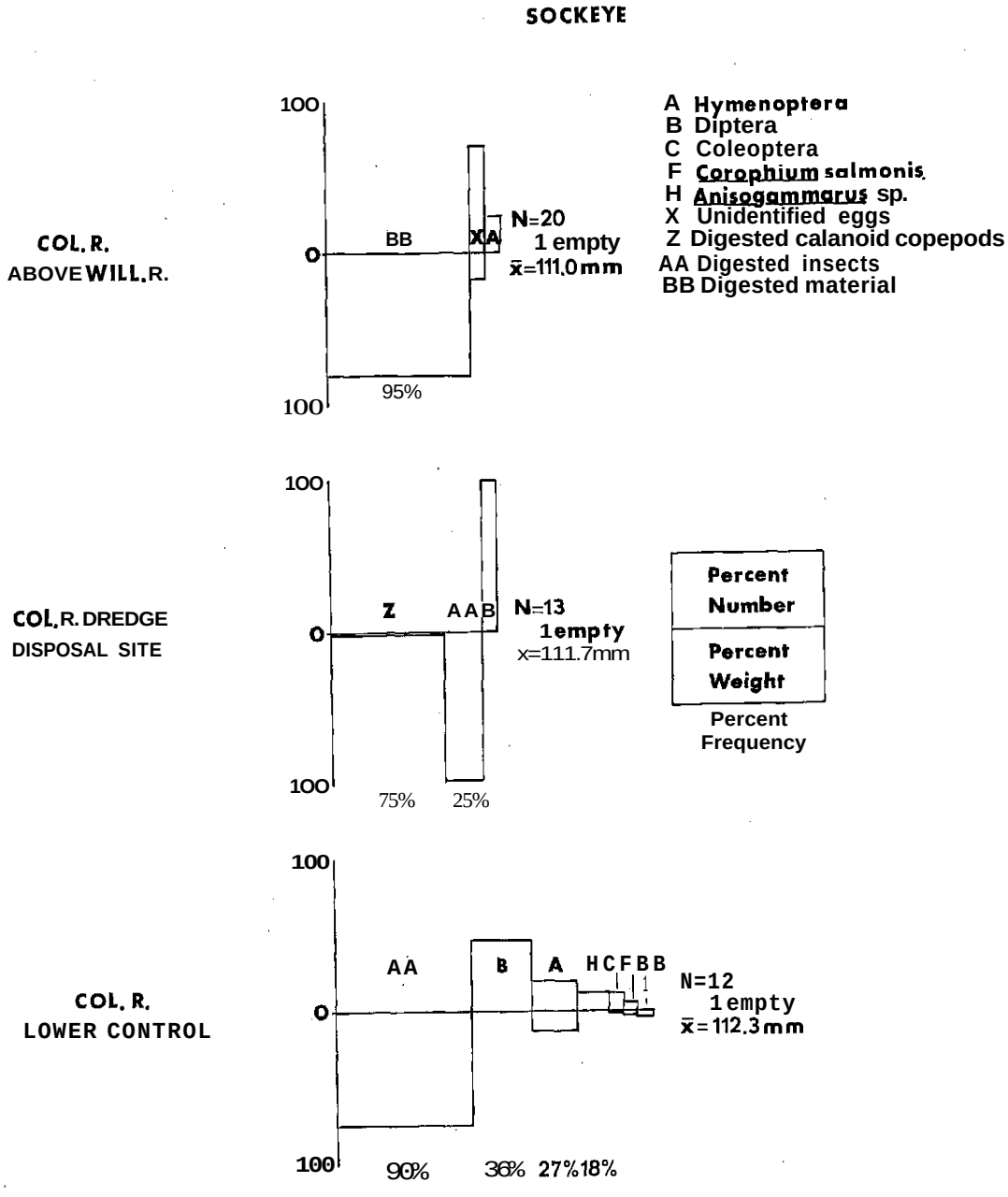

Figure 5...The index of relative importance (IRI) of food items consumed by 42 juvenile sockeye salmon captured during purse seining in the Columbia River, 5 and 6 June 1978 (Blahm et al. 1979).

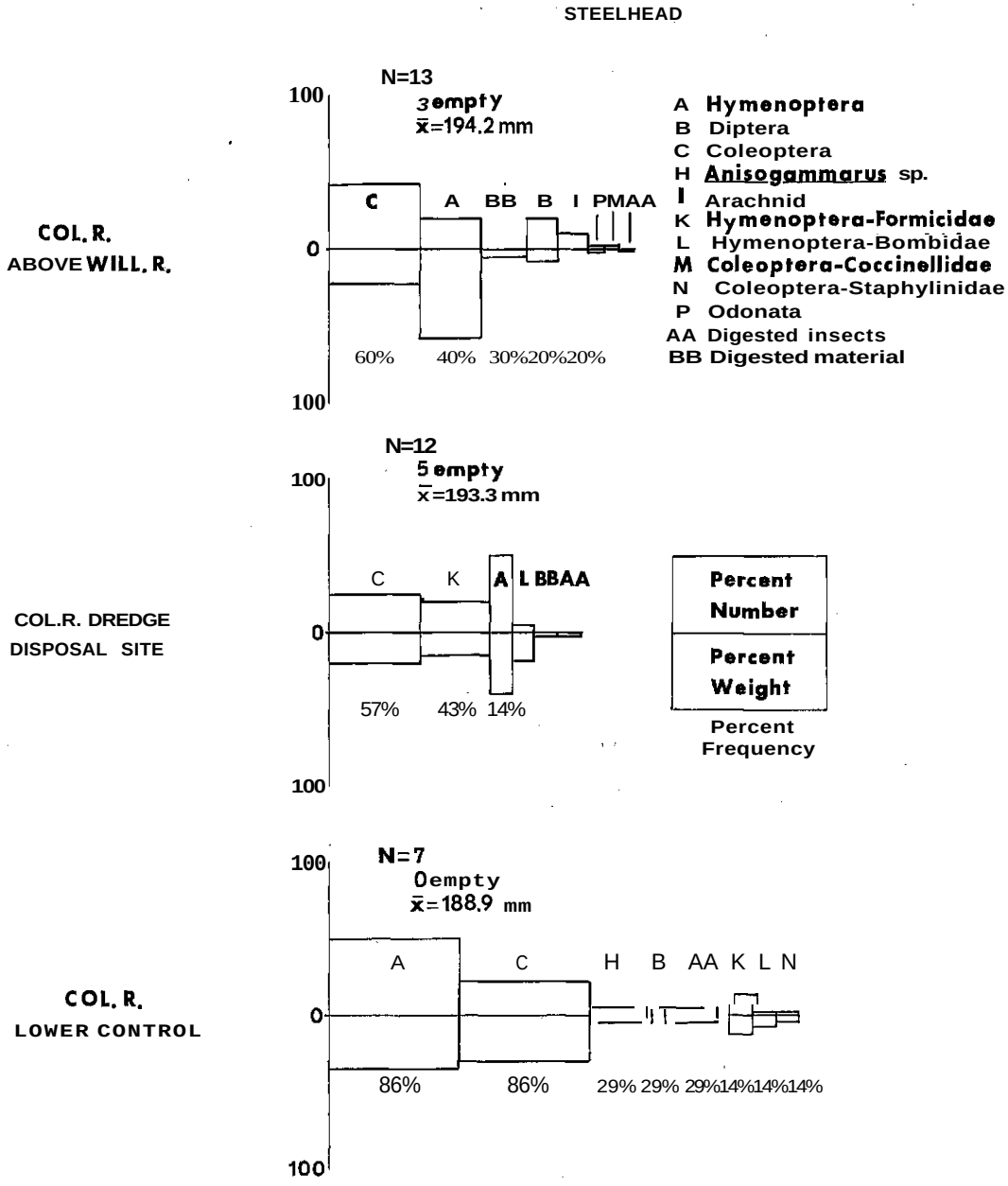

Figure 6...The index of relative importance (IRI) for items consumed by 24 juvenile steelhead in the Columbia and Willamette River 1978 (Blahm et al. 1979).

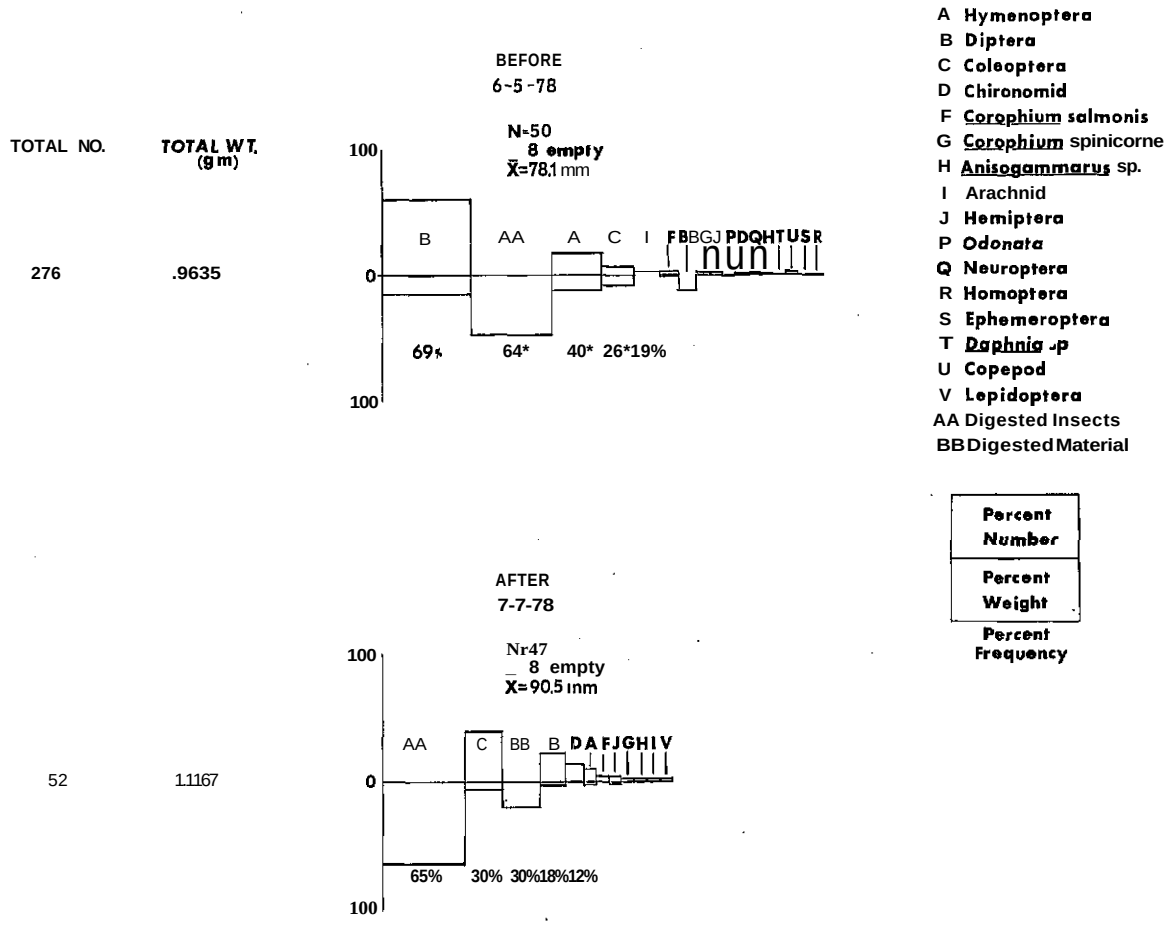

IR1 INDEX	DIPTERA	COLEOPTERA	HYMENOPTERA	CHIRONOMID	AMPHIPOD	OTHER	TOTAL
BEFORE	5064	403	1259	5	73	98	6902
AFTER	438	1293	105	166	38	50	2090

Figure 7...The index of relative importance (IRI) of food items consumed by chinook salmon captured in the Portland Harbor or region of the Columbia River prior to and following the Toyota Maru oil spill.

in the stomachs. Further, the number of recognizable prey items were far less after the spill even though overall weights were similar. This could also suggest a diminished availability of insects and amphipods in the immediate Portland Harbor area.

One should also note that the rate of growth for downstream migrating juvenile chinook salmon accelerates during June and July. It can be seen that their mean fork length is 78.1 mm in June (Figure 7). Although not included in the chart, salmon this length have an average weight of 3.5 grams. In July, one month later chinook salmon migrants averaged 90.5 mm (Figure 7); however, their weight averaged 7 grams, essentially doubling their size in a month. Their ability to capture and contain more and larger food items should have been reflected by their gut contents if prey had been available.

ALTERATIONS OF FISH BEHAVIOR

Previous data from a Kalama beach seining site during a study done in 1971 to 1974 indicate that some fish had always been present; however, subsequent to the oil spill the numbers and species captured declined to zero then began to increase after a few days. The disappearance of the nonsalmonid fishes seems to be coincidental with the oil spill. While nonsalmonid species were not captured at the Kalama site, salmonid fishes were captured in small numbers, probably because they were migrating downstream. Total numbers of fish captured with a purse seine near the spill (CRM 100 to 102.5) site declined from before the spill to after the spill (Table 8). The decline in fish abundance and diversity, subsequent to the oil spill, at the two sites mentioned could be caused by fish aversion to the petroleum compounds. Their reaction upon detecting the

presence of petroleum may be to remove themselves to an uncontaminated area, maybe deeper water with maximum flow or an unaffected tributary. Subsamples of all species captured were retained and examined fresh-dead for indications of oil residue. The examination included gills and stomach. Following is an outline of the results:

Species	Number examined	Gills	Stomachs
Salmonids	10	Clean	Clean
Nonsalmonids			
bottom feeders	15	Oil globules	Oil globules
water column feeders	15	Clean	Clean

It appears as though the bottom feeders were affected by the oil. Their stomachs held quantities of sand picked up from the bottom which was contaminated with oil. Their gills appeared to be adversely affected; however, obvious hyperplasia or hypertrophy was not evident; recovery seemed possible.

SUMMARY OBSERVATIONS

1. Bunker C oil components were identified on the water surface of the Columbia River at CRM 18.

2. Bunker C oil fractions were identified from 24 of 28 sediment samples taken from CRM 4.5 to 105.

3. Three of eighteen fish flesh samples contained significant Bunker C fuel oil components while three additional samples were contaminated with petroleum hydrocarbons to a lesser degree.

4. Finfish (demersal and pelagic) captured in the sampling gear employed showed a decrease in diversity and abundance from before to after the oil spill between CRM 28 and 102.

5. Previous stomach sampling (prior to spill) confirmed that finfish consumed those species of benthic invertebrates and insects which occur in the Columbia between CRM 4.5 and 102.

6. Fall chinook salmon juveniles were the only species that occurred in sufficient numbers after the spill to examine their stomach contents, which was mostly digested material, indicating that the food had been consumed prior to the spill or out of the affected area.

7. Benthic infauna near the spill site sampled after the oil spill showed an increase from previous sampling; however, overall abundance during both samplings was relatively low.

8. Benthic sampling between CRM 4.5 and 29 revealed that 12 of 14 sites had fewer organisms per m^2 right after the oil spill, but recovery to before spill levels was indicated in February 1979 samples. The increase in numbers of organisms is partially attributed to seasonal variation.

9. Dead amphipods (important food source) collected near Kalama, Washington were covered with Bunker C residue.

CONCLUSIONS

We did not find dead fish. Our observations are based on catches of live fish which could be the survivors of the prespill populations. Indications from the data collected, and our observations, in relation to finfish, benthic invertebrates and sediments are that changes occurred which demonstrate an impact on the biota of the Columbia River and its estuary. However, even with extensive riverine fishery baseline data in the area of an oil spill (and the downstream reach), it is unlikely, using the present assessment approach, that conclusions could be made regarding

the extent of damage to finfish resources from a Bunker C spill of the magnitude of Toyota Maru #10.

The National Marine Fisheries Service has recently prepared guidelines for collection and handling of environmental samples for trace analyses of organic chemical contaminants and for microscopic examination. Chain of custody procedures are included in the guidelines; if followed precisely they will provide documentation of sample results which will enhance the reliability of data to be used to assess damages.

ACKNOWLEDGEMENT

The authors wish to express their appreciation to the following people (1) Mr. Earl Dawley and his crew at Jones Beach, (2) Mr. Dave Miller and his crew stationed at Chinook, Washington, (3.) Mrs. Sandy Lipovsky for stomach analysis, (4) Misters Robert McConnell, Lawrence Davis, Maurice Laird, Edward Koller, Roy Pettit, Nick Zorich for sample collection, and Nancy Knox and Alta Scott for typing.

LITERATURE CITED

American Public Health Association.
1975. Standard methods for the examination of water and wastewater. 14th ed. Am. Public Health Assoc., Wash. D.C. 874 p.

Blahm, T. H., J. T. Durkin, R. J. McConnell, L. G. Davis, and T. C. Coley.
1979. Portland Harbor predredge and disposal study. Final report to Portland Dist., CofE. Contract No. DACW57-78-F-0575.

Carl, G. C., W. A. Clemens, and C. C. Lindsey.
1959. The fresh-water fishes of British Columbia. Handbook No. 5. Brit. Col. Prov. Mus. 192 pp.

Craddock, D. R., T. H. Blahm, and W. D. Parente.
1976. Occurrence and utilization of zooplankton by juvenile chinook salmon in the lower Columbia River. Trans. Amer. Fish. Soc. 105 (l):72-76.

Durkin, J. T., S. J. Lipovsky, and R. J. McConnell.
1979. Biological impact of a flow-lane disposal project near Pillar Rock in the Columbia River estuary. Final report to U.S. Army CofE, Portland District. Contract No. DACW57-77-F-0621. 92 pp.

Hart, J. L.
1973. Pacific fishes of Canada. Bull. No. 180. Fish. Res. Bd. Can. 740 pp.

Pennak, Robert W.
1953. Fresh-water invertebrates of the United States. Ronald Press Company. New York. 769 pp.

Scott, W. B., and E. J. Crossman.
1973. Freshwater fishes of Canada. Bull. No. 184. Fish. Res. Bd. Can., 766 pp.

Sims, C. W., and R. H. Johnsen.
1974. A variable-mesh beach seine for sampling juvenile salmon in the Columbia River Estuary. Mar. Fish. Rev. 36 (2):22-26. MFR 1036.

Snyder, G. R., and R. J. McConnell.
1973. Frequency and duration of flow reversal in the lower Columbia River. April 1968 to March 1970. Fish. Bull. Vol. 71, No. 1.

Ward, H. B., and G. C. Whipple.
1959. Fresh-water biology. Edited by W. T. Edmondson, Professor of Zoology, University of Washington, Seattle. 2nd ed. John Wiley and Sons.

Weber, Cornelius I.
1973. Biological field and laboratory methods for measuring the quality of surface waters and effluents EPA 670/4-73-001. National Environmental Research Center, Office of Research and Development, Cincinnati, Ohio.