VELOCITY MATCHING TRAVELING SCREENS FOR JUVENILE MIGRANT COLLECTION

by

Daniel W. Bates

and

John G. VanDerwalker

September 1964

FISH-PASSAGE RESEARCH PROGRAM
U.S. Bureau of Commercial Fisheries
Seattle, Washington

INTRODUCTION

In the search for a practical method for collecting juvenile salmonids from rivers and streams, many plans have been conceived and tested. None of these, however, have been able to cope successfully with the high flows and debris of a major river in flood without excessive cost. In an attempt to eliminate the need for expensive structures capable of withstanding high flow velocities, a method of guiding fish by the use of suspended velocity-matching visual references was proposed by Long[1/]. The system would utilize moving visual references traveling diagonally across the stream similar in concept to those described by Brett (1958) but moving in a downstream direction at a rate equal to the downstream velocity of the stream. The velocity-matching aspect of the system would actually permit the guiding of fish in stream velocities greater than the maximum swimming speed of the fish.

Because the degree of guiding efficiency that might be expected with moving visual references in turbid, turbulent water was questionable, the velocity-matching concept was extended by the authors for use with a traveling screen that appeared to give promise of greater guiding effectiveness. The following account describes the fabrication and operation of two velocity-matching traveling screens that were installed for test purposes in the behavioral flume at Carson, Washington; reports on the guiding efficiency obtained; and discusses future potential of the method.

EQUIPMENT AND PROCEDURE

Experimental Flume

The Carson behavioral flume (fig. 1) measures 50 feet long, 6 feet wide, and 4 feet deep. The flume floor has only sufficient slope to facilitate drainage. To allow observation of fish response, a clear plastic window 3.5 feet high and 6 feet long was installed on one side near the downstream end of the flume.

At the downstream end of the flume a perforated plate inclined screen and trap (fig. 2) were installed to recapture

---

1/ Long, Clifford W. The use of velocity-matching visual references in guiding fish. Manuscript in preparation.

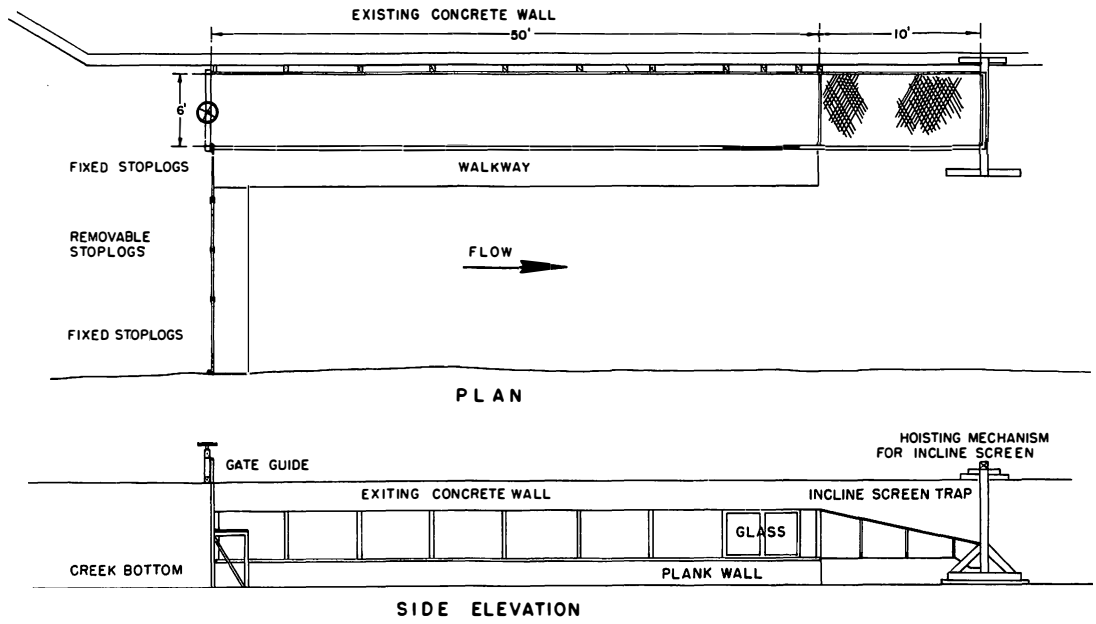

Figure 1.--Diagrammatic sketch showing both plan and elevation of Carson behavioral flume.

Figure 2.--The Carson flume with inclined-screen traps in foreground.

test fish from which a deflection efficiency could be determined. In most cases all released fish would pass immediately downstream; those remaining upstream were not included in the deflection efficiency determination. A bypass was provided for fish guided by the facility.

A continuing source of crystal-clear water for the flume was provided by Tyee Springs originating several thousand feet away from the structure. By means of stoplogs this flow of water (45 c.f.s. maximum) could be directed completely, or in part, into the flume. Water temperatures ranged between 46° and 52° F.

Velocity was controlled by means of stoplogs positioned at the downstream end of the flume. Although an average head of approximately 24 inches prevailed most of the time, a maximum head of 36 inches could be developed. Any velocity up to a maximum of 3.2 feet per second could be secured through appropriate setting of the stoplogs. Velocity readings taken throughout the flume indicated a relatively uniform flow.

Experimental Apparatus

Two different designs of velocity-matching traveling screens were tested in the Carson flume. Each system was composed of four main parts: the drive unit, the suspension or tracking unit, the stationary screen supports, and an endless screen belt.

The drive unit (fig. 3) was made up of a variable speed d.c. motor and reduction gear, pocket sheaves, and a drive chain. A 1-horsepower motor with a reduction gear which allowed a range of 10 to 170 revolutions per minute was used in both systems. A pocket sheave with a 22¼-inch circumference which accommodated a 17/64-inch hand chain was mounted on the drive shaft of the reduction gear. The maximum speed attained by the chain using this drive unit was 5 f.p.s.

The pocket sheave on the drive shaft, along with all other sheaves used in the installation had two notches cut in the bottom rim to allow the hangers which supported the screen to pass around them. Figure 3 shows the pocket sheaves and chain with hangers for mounting the screen. These hangers were made by welding a 5/16-inch eye bolt to every 10th and 22nd link in the chain.

A track was provided to guide and support the chain as it traveled between the sheaves. Figure 4 shows the track with the chain fitted into it. During operation these tracks were liberally greased to allow the chain to slide smoothly over them.

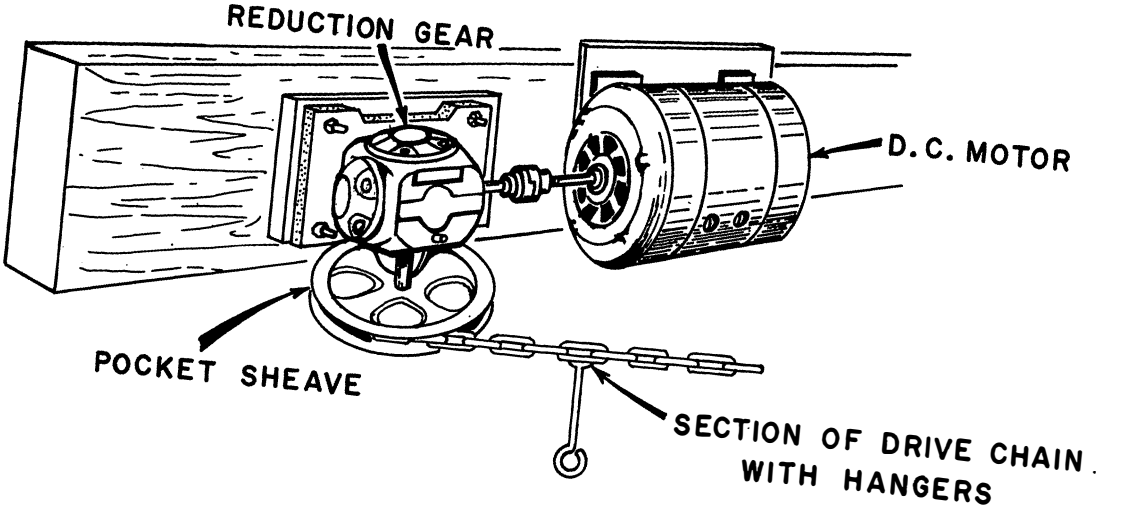

Figure 3.--Sketch of variable-speed d.c. motor and reduction gear drive assembly.

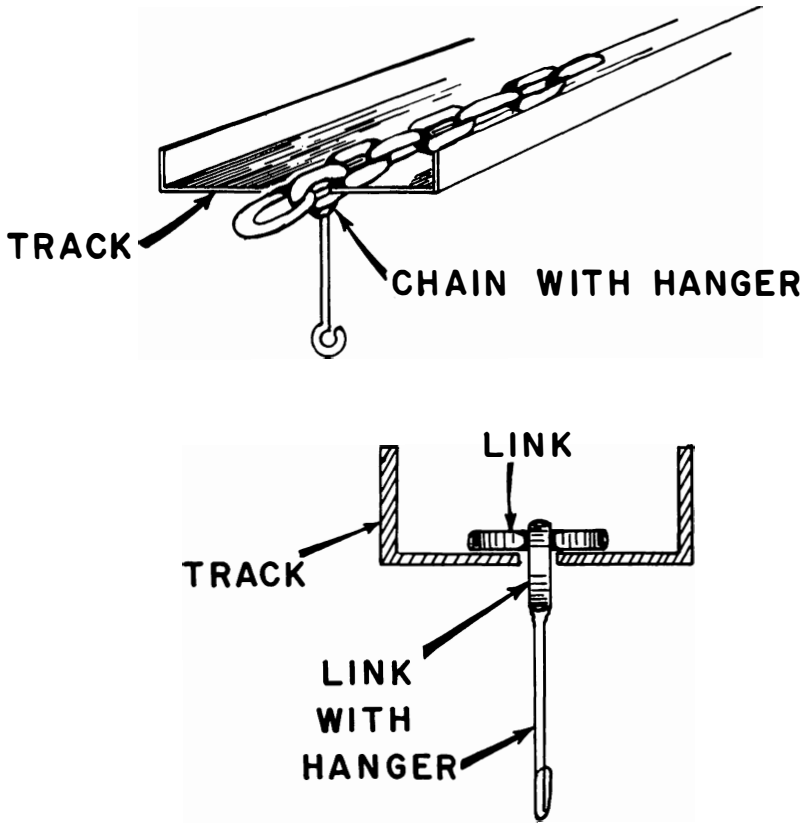

Figure 4.--Sketch of drive chain support and guide.

The screen was a 36-inch wide endless belt constructed of 1/4-inch round spiral-weave screen (commonly used in fireplace screening) and 1/8-inch by 1-inch flat-bar steel brackets (fig. 5). The brackets were bolted to the top edge of the screen at intervals which corresponded to the hangers on the chain. These brackets had a hole drilled in the top so they could be attached to the drive chain with "S" hooks. To make a more flexible joint, these "S" hooks were later replaced with size 14 brass single-jack chain loops. Every fourth bracket extended to the bottom of the screen to serve as support to stiffen the screen and prevent it from sagging.

Additional support for the screen was provided by constructing two stationary rails, or curbs, on the downstream side parallel to the leading face of the screen (fig. 5). These curbs, constructed of 1-inch strap iron, prevented the screen from being swept downstream and away from the floor by the water current. The bottom curb, located on the floor, also prevented fish from passing under the screen in case it was not in contact with the bottom at all times. The ends of the curbs were rounded so they would not snag the screen as it traveled around them.

Model I.--A plan view of the first velocity-matching traveling screen is shown in figure 6. The continuous belt screen traveled from the upstream end (A) to the entrance of the bypass (B) on a 20° angle to flow (ABE). This portion of the screen which was supported by the two stationary rails moved at approximately the same speed as the water.

As the screen traveled from B to C it passed a rubber seal which rested against it, forming a flexible joint between the bypass wall and the screen (fig. 7). This seal prevented any fish loss at this point. To form the screen as it passed from B to C and to hold it against the rubber seal, two 7-inch pulleys mounted on a vertical shaft were placed on the side of the screen opposite the seal. This shaft also had the downstream pocket sheave attached to it.

After passing through the downstream seal, the screen traveled upstream against the current to point D. There was no support for this portion of the screen and it tended to be swept up off the floor by the water current. From D the screen went around the upstream sheave to A where it passed by another seal similar to the downstream one. At the top traveling speed of 5 f.p.s., any point on the screen could make a complete circuit in 5.5 seconds.

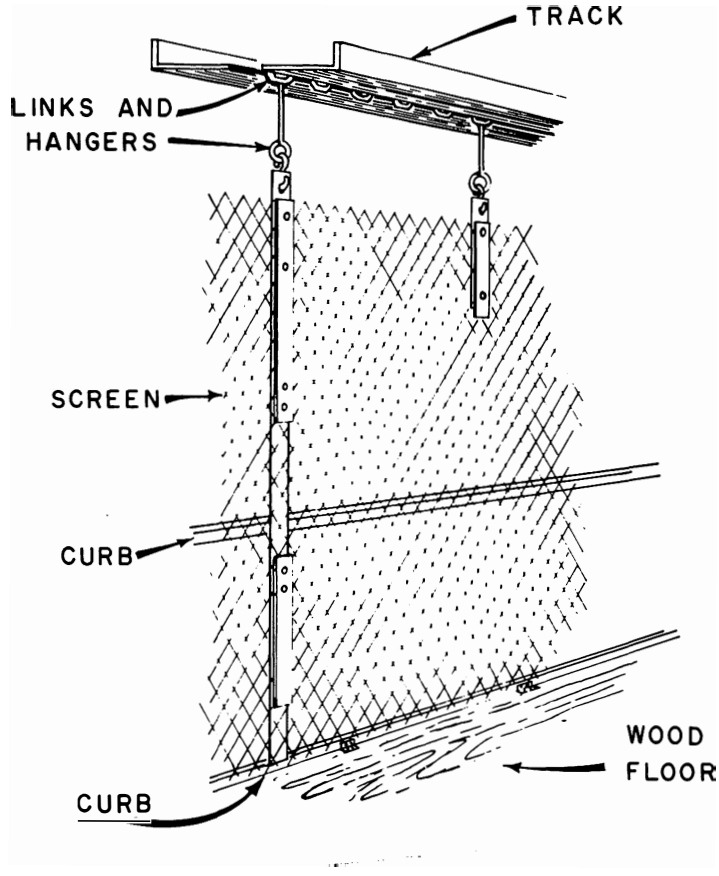

Figure 5.--Sketch of screen and 1-inch flat bar bracket attachments.

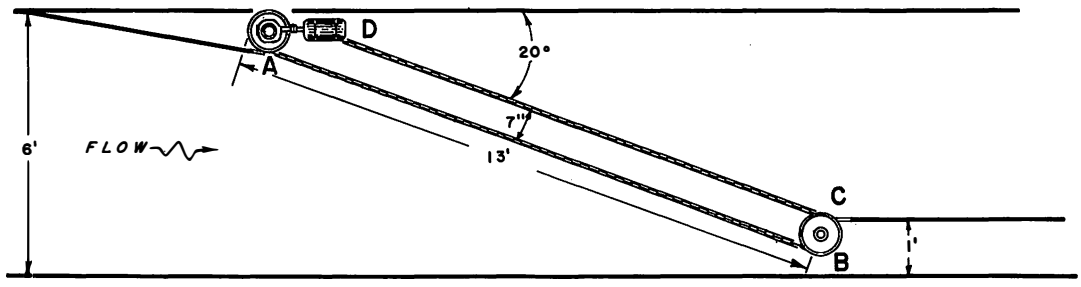

6

Figure 6.--Diagrammatic sketch of Model I velocity-matching traveling screen.

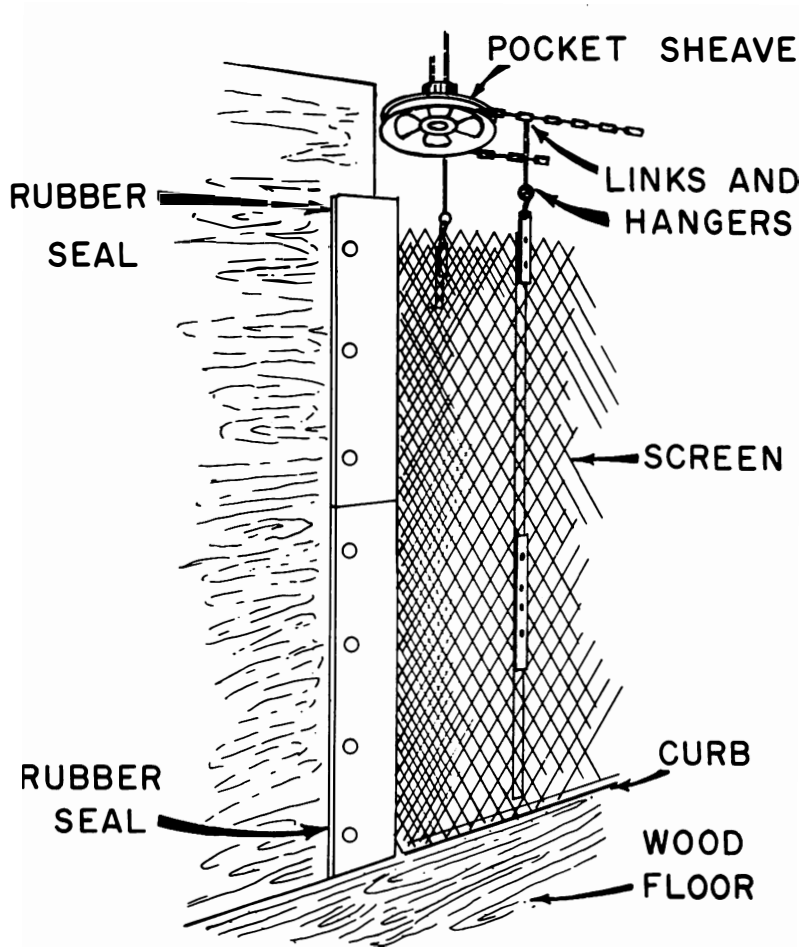

Figure 7.--View of sealing fabrication at juncture of screen and bypass.

Model II.--A second traveling-belt screen was designed to eliminate the drag that developed when the screen traveled upstream, as it did in Model I (that portion of the screen between C and D; see fig. 6). This was accomplished by lifting the screen out of the water as it traveled upstream.

A schematic drawing of Model II is shown in figure 8. The screen traveled from the upstream end (F) to the downstream sheave (G) on a 20° angle to flow (FGK). At point G the screen went around a sheave and turned into the flume at a 20° angle. The screen also began rising at an angle of 22°. By the time the screen reached point (H) it had been lifted 2 feet up off the flume floor. The screen traveled at this height from H to J where it began descending. By the time it reached F, the bottom of the screen was in contact with the floor.

The leading face of the screen was supported with the same type of stationary curbs as used in Model I. An upstream seal, F, was also installed. Since Model II was designed to illustrate the principle of raising the screen out of the water, and not to guide fish, no seal was installed at point G.

Basically, Model II was built and operated in the same way as Model I. The major difference was that the drive unit and the tracking structure had to be tipped to allow the screen to come out of the water on the upstream trip. All of the sheaves and track were laid on the same plane, which was on a 22° angle to the floor.

Bypass

With louvers, it is extremely important that a correct relationship between the approach and bypass velocity be maintained to prevent fish from refusing the bypass and swimming back upstream along and possibly through the louvers. Through the use of a continuous screen curtain, provided the seals at at either end and along the bottom are well fitted, there should be no fish loss. It is therefore probable that the bypass flow conditions can be less stringent. Bypass width at Carson was arbitrarily set at 1 foot.

Test Procedure

Test fish were spring chinook salmon 3.5 to 6 inches in length and coho salmon 2 to 3 inches in length. These fish were dip-netted from a raceway, placed in containers, and transported for release into the upstream end of the flume.

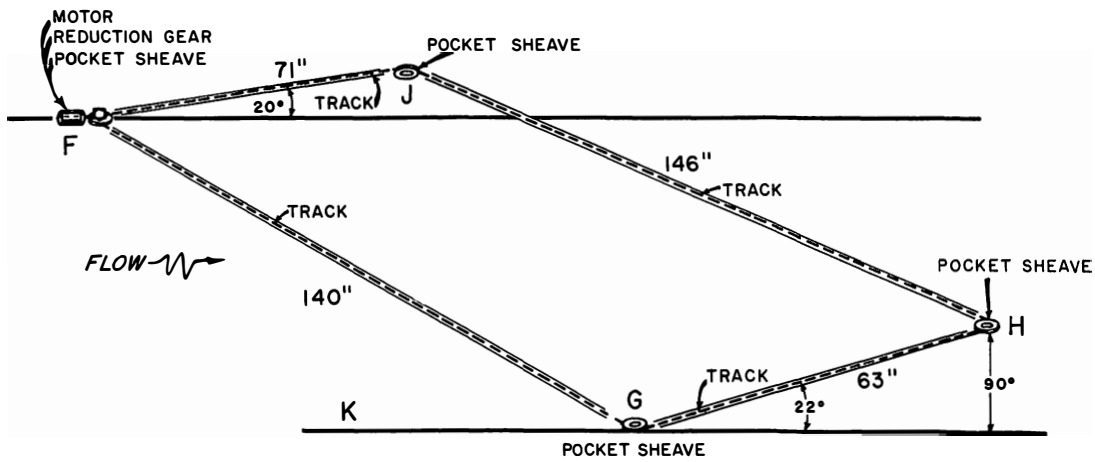

Figure 8.--Schematic drawing of velocity-matching traveling screen, Model II.

Several hundred fish were released per test into specific velocities of 1.5, 2.5, and 3.2 f.p.s. The fish which migrated down the flume were guided by the screen into the bypass and swept over an inclined screen into a trap. Numbers of fish tested and numbers of tests performed at each velocity are listed below:

Species	Water velocity		
	1.5	2.5	3.2
	F.p.s.	F.p.s.	F.p.s.
Chinook salmon			
Number of tests	4	8	5
Number of fish	1,537	2,326	1,790
Coho salmon			
Number of tests	6	9	5
Number of fish	1,838	2,140	1,407

RESULTS AND DISCUSSION

One-hundred percent efficiencies were achieved for both chinook and coho salmon at approximate velocities of 1.5, 2.5, and 3.2 f.p.s. The high efficiencies are understandable (1) as the effective open area of screen mesh was of such size as to preclude fish passing through and (2) as the sealing system at either end and along the canal floor was well fitted.

Head loss across the screen of both models was held to a minimum owing to the motion of the screen across the canal. Head loss was higher on the Model I screen, due to the screen being dragged back through the flow on its return.

Debris in the form of moss, leaves, twigs, and grass was continuously passing downstream. Due to the matching travel rate of screens and flow, debris not only impinged gently onto the screens but also washed off readily. Although no large volumes of debris were passing downstream, that which did pass provided indication that cleaning would not be difficult. Even though the two systems operated efficiently, it is recognized that many design modifications will be required when considering a prototype facility.

Placement of the traveling screen units on a small (20°) angle to flow provided two advantages: First, the young fish could readily deflect even at higher velocities; and second,

travel rates of screens to match the approach flow are proportionately less at the smaller angles. For example, with an approach velocity of 5 f.p.s. and a structure angle of 20°, the screens--to match the approach velocity--must travel at 5.3 f.p.s. However, with a screen angle of 45° and without changing the approach velocity, required screen travel would be 7.0 f.p.s.

The considerations for angular placement of traveling screens within a canal, with the exception of cost, are not the same for louvers. To effectively guide along the louver, it is important for fish to be able to swim continuously. This requires suitable approach velocities and a structure angle sufficiently low to allow young fish to readily deflect. With the traveling screen, this does not appear too important. If fish are unable to maintain control and impingement results, the impinging force is gentle and the period of impingement brief due to the continuous travel of the screens.

FUTURE INVESTIGATIONS

Since the traveling screen plan is new and relatively undeveloped, many questions have arisen which will require additional consideration:

1. Relative degree of drag of screens of various material, open area, and design. These are currently being studied.

2. Relationship of screen mesh size to size of the juvenile migrant as a factor in possible fish loss. This will be explored at the Carson behavioral flume.

3. Need for a positive wash system to prevent development of clogging and resultant head.

4. Adjustment of the sealing system to insure high fish collection efficiency. A rubber or neoprene bumper attached to the bottom of the screen could be used to make contact with the sill and absorb wear. Supports installed immediately behind the screens to hold them in a vertical position and prevent their billowing would increase the effectiveness of the bottom seal.

5. Screen inspection. This may be desirable to provide an alternate method for inspection.

6. Screen repair. To accomplish this, the use of replaceable screen panels is being considered.

7. Need to match the velocity of stream flow. The debris load of a river and the swimming ability (as affected by size, species, and condition) of the migrants may determine how critical this is.

8. Carrier system. One design would provide a modified monocable tramway as used at ski resorts (fig. 9). Such a plan would allow for long unhindered spans across rivers. The other plan suggests the use of an engineered beam capable of a long span free of sag.

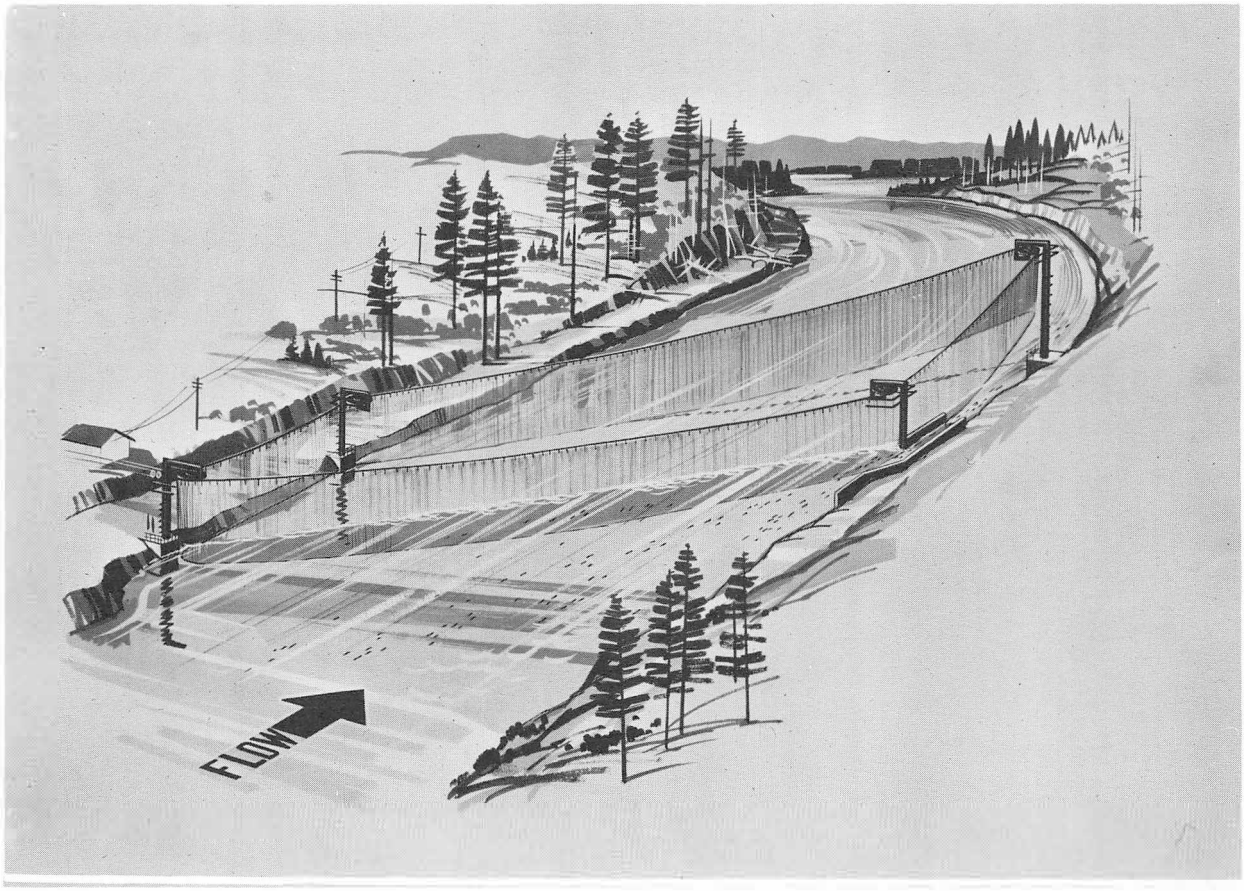

Figure 9.--Artist's concept of the monocable tramway traveling screen carrier.