UNITED STATES DEPARTMENT OF THE INTERIOR
Walter J. Hickel, *Secretary*
Leslie L. Glasgow, *Assistant Secretary*
for Fish and Wildlife, Parks, and Marine Resources
Charles H. Meacham, *Commissioner*, U.S. FISH AND WILDLIFE SERVICE
Philip M. Roedel, *Director*, BUREAU OF COMMERCIAL FISHERIES

Preliminary Designs of Traveling Screens to Collect Juvenile Fish

United States Fish and Wildlife Service
Special Scientific Report--Fisheries No. 608

Washington, D.C.

July 1970

FOREWORD

For many years biologists and engineers have been studying the problem of safeguarding juvenile salmon, shad, and striped bass from destruction in rivers that have hazardous hydroelectric or irrigation developments. As part of their research, they have studied the possibility of deflecting fish from their normal routes to alternate routes around the hazardous areas. Numerous methods of deflecting fish have been examined, such as bands of rising bubbles, curtains of hanging chains, electrical stimuli, lights, louvers, sound, and water jets. These methods were efficient under certain circumstances but were never completely reliable.

Notwithstanding the extensive and imaginative research, all fish guiding or deflection devices in use today are burdened with one or more of the following disadvantages: (1) high cost, (2) insufficient guiding efficiency, (3) mechanical limitations where the depth is great, the volume of water large, or the cross-sectional area of the canal or stream of extreme size, (4) excessive loss of head, (5) limitation in safely guiding or collecting not only fry but eggs (of striped bass and shad), (6) need for frequent adjustments to compensate for changes in flow volume, and (7) excessive maintenance.

The traveling screens described here were developed to overcome these disadvantages. A traveling screen may be generally described as a conveyor belt placed on edge diagonally across the path of juvenile fish migrating downstream. Young fish that approach the screen tend to avoid it as they continue downstream and thus are guided into a bypass at the downstream end of the structure.

Since 1965, biologists and engineers of BCF (Bureau of Commercial Fisheries) have developed and tested a series of six experimental traveling screens; another is in the design stage. The early models were not completely reliable, and fish were killed or damaged. The designs had to be improved.

The developments reported in this Special Scientific Report - Fisheries have greatly encouraged those who have to contend with the fishery problems arising from the multiple use of our great river systems. Perfection of fish protective devices will help eliminate one of the serious obstacles to the maintenance of stocks of fish.

Charles H. Meacham

Charles H. Meacham, Commissioner
U.S. Fish and Wildlife Service

INTRODUCTION

This report describes the design and operation of models I, II, and V. No report has been prepared on model III--the differences in design between it and model II were not great enough to warrant a separate report. Models IV and VI have been tested, and reports describing their features and operation are being prepared.

The basic design for model I was taken from that developed by the Fisheries Research Board of Canada during an investigation with traveling cables and a chain. BCF experiments on model I indicated a need to eliminate the drag created by the screen as it returned upstream through the water. This change was accomplished in model II by raising the screen clear of the water on its return upstream.

Model III, installed and tested within the Maxwell Canal (Hermiston, Oreg.) during 1966, had some improvements over model II, particularly in design of the carriage, track, and drive systems.

The step from model III to IV was significant from the standpoint of design and size of structure--the carriage and track systems were drastically changed, and the screen had to be made larger and stronger to handle flows that were 10 times greater than those handled by model III.

Model V represented a complete change in design and incorporated such features as a cable-suspension support structure, cantilevered screen panels to resist water forces, and replaceable panels in lieu of continuous screen belting.

CONTENTS

Page

Traveling screens, for collection of juvenile salmon (Models I and II), by Daniel W. Bates and John G. Vanderwalker 1

Introduction 1

Traveling screen 1
- Design 1
- Drive unit 1
- Tracking unit 1
- Screen belt and supports 1

Operating 3
- Model I 3
- Model II 3

Method of testing screen 4
- Description of flume 4
- Bypass 4
- Test fish 4

Efficiency of the screen 4

Advantages of the screen 5

Literature cited 5

Design and operation of a cantilevered traveling fish screen (Model V), by Daniel W. Bates, Ernest W. Murphey, and Earl F. Prentice 6

Introduction 6

Description of traveling screen 6
- Structural design 7
  - Suspension system 8
  - Torque tube and cables 8
  - Track design and support 9
- Mechanical aspects 10
  - Drive system 10
  - Bull wheels 10
  - Haul line 10
- Screen support system 10
  - Carriages 10
  - Stiff-legs 10
  - Netting and attachment 10
- Bypass design 11

Operation of traveling screen 11
- Rate of travel 12
- Loss of head 12
- Efficiency of deflection 12
- Self-cleaning capabilities 13
- Bypass 13

Effectiveness of traveling screen 14

Summary 14

Literature cited 15

Traveling Screens for Collection of Juvenile Salmon (Models I and II)

By

DANIEL W. BATES and JOHN G. VANDERWALKER, Fishery Biologists

Bureau of Commercial Fisheries Biological Laboratory
Seattle, Washington 98102

ABSTRACT

Two horizontal traveling screens were designed and operated for 2 years at the Carson National Fish Hatchery, Carson, Wash. Deflection efficiencies were 100 percent in 37 tests of over 11,000 juvenile coho, Oncorhynchus kisutch, and chinook salmon, O. tshawytscha. The screens demonstrated their potential capacity to divert young salmon moving downstream.

INTRODUCTION

This paper describes the fabrication, operation, and efficiency of two horizontally traveling screens (models I and II). The screens are similar to the deflection device described by Brett and Alderdice (1958) in which fish were guided to a collection area with traveling cables. We used an endless screen belt instead of cables.

TRAVELING SCREEN

In this section the general design of the screens will be discussed, followed by the major features of the design--the drive unit, the tracking unit, and the screen belt and supports--which will be described in detail.

Design

The diagrammatic structure of the first experimental traveling screen (model I) is shown in figure 1. The fish are drifting downstream tail first. The screen, which resembles a conveyor belt on edge, was designed to return upstream through the water, but the extensive drag led to the development of a second screen in which return travel would be above and out of the water. This second screen (model II), built several months later, closely resembled model I except for the return structure. The following sections apply to both models and describe the drive units, tracking units, and endless screen belt and supports.

Drive Unit

The drive unit (fig. 2) consisted of a variable-speed d.c. motor and reduction gear, pocket sheaves, and a drive chain. A 1-hp. motor with a 10-170-r.p.m. reduction gear was used in both systems. A pocket sheave with a 56.5-cm. circumference, which accommodated a 6.8-mm. hand chain, was mounted on the drive shaft of the reduction gear. The maximum speed attained by the chain was 1.5 m.p.s. (meters per second).

The pocket sheave on the drive shaft, like the other sheaves, had two notches cut in the bottom rim to allow the hangers that supported the screen to pass around it. Figure 3 shows the track and chain with hangers (8-mm. eyebolt welded to every 10th and 22d link in the chain) for mounting the screen.

Tracking Unit

A track guided and supported the chain as it traveled between the sheaves (fig. 4). These tracks were greased liberally to reduce friction.

Screen Belt and Supports

The endless screen belt was constructed of spiral-wound carbon steel wire, like that commonly used in fireplace screens. The particular screen we used was 90-cm. wide, with 8-mm. openings and a 72-percent effective open area.

The screen was supported by flat-bar steel brackets, 3.2 mm. by 25.4 mm., bolted to its

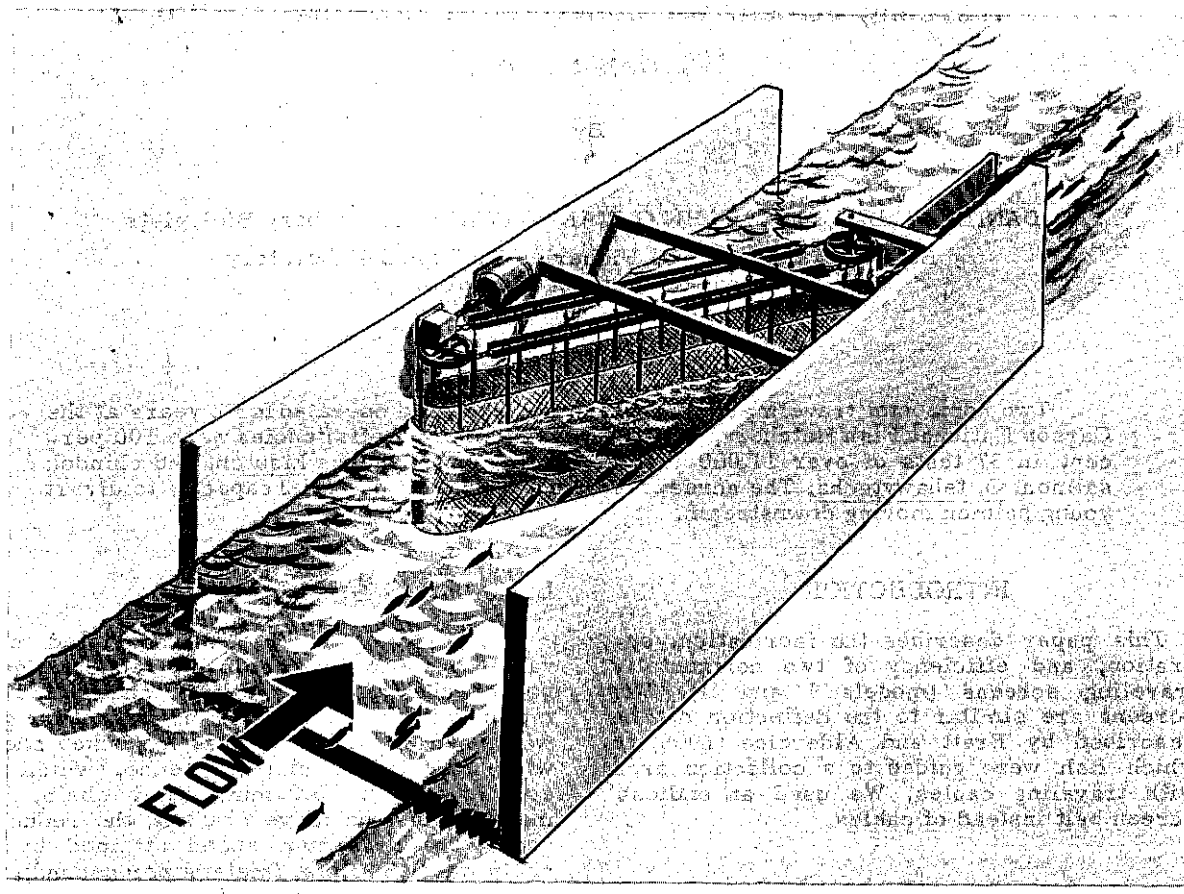

Figure 1.--Horizontal traveling screen, model I.

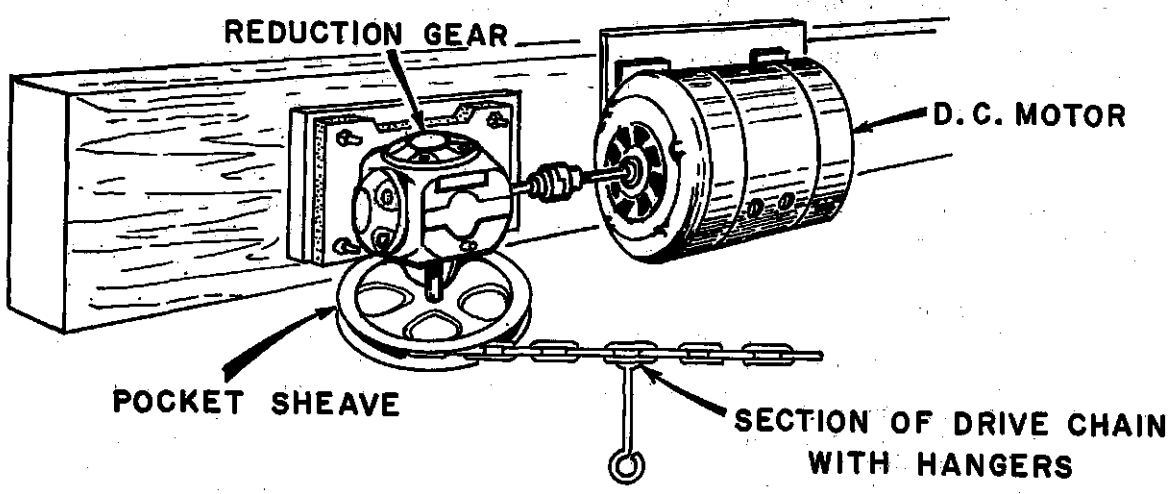

Figure 2.--Variable-speed d.c. motor and reduction gear drive assembly on traveling screen.

top edge at intervals corresponding to the hangers on the chain (fig. 4). Every fourth bracket extended to the bottom of the screen to serve as a stiffener. The brackets were attached to the drive chain with size 14, brass single-jack chain loops.

Additional support was provided by two stationary, horizontal rub-rails on the downstream side of the screen (fig. 4). The rub-rails, constructed of 25-mm. wide strap-iron, prevented the screen from being swept out of position by the flow. The rub-rail mounted on the floor also prevented fish from passing under the screen. The ends of the rub-rails were curved to eliminate the possibility of the screen becoming caught.

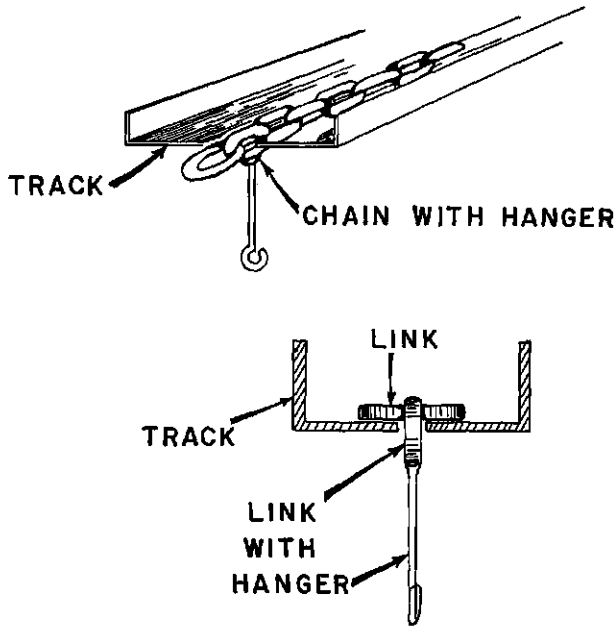

Figure 3.--Support and guide for the drive on the traveling screen.

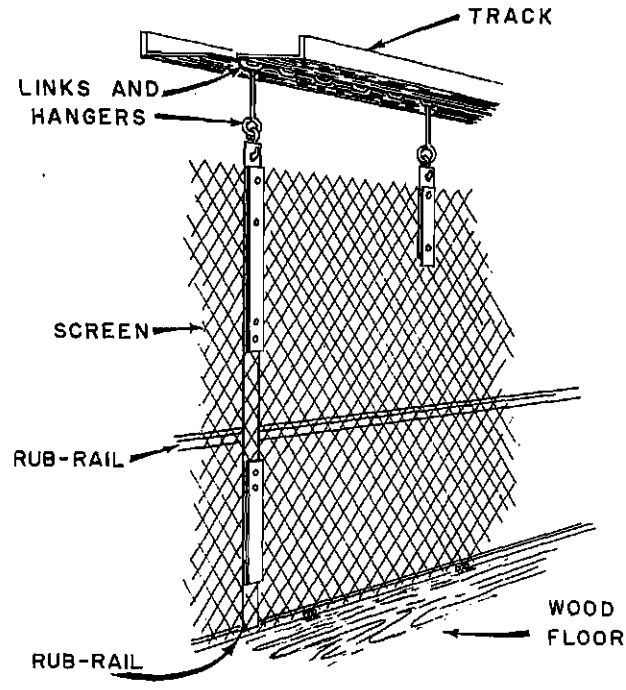

Figure 4.--Screen and 25-mm. flat bracket attachments.

OPERATION

Model I

Figure 5 shows a plan view of the first traveling screen. The continuous belt screen traveled from the upstream end (A) to the entrance of the bypass (B) at a 20° angle to the flow. This portion of the screen was supported by the two stationary rub-rails.

As the screen traveled from B to C it passed a rubber seal which formed a flexible joint between the bypass wall and the screen; the seal prevented loss of fish. To support the screen as it passed from B to C and to hold it against the rubber seal, two 18-cm. pulleys were mounted on a vertical shaft that extended from the downstream pocket sheave to the floor. The top pulley was 76 cm. from the floor; the other was 10 cm.

After it passed through the downstream seal, the screen traveled upstream against the current to point D, and around the upstream sheave, past another seal similar to the one downstream, to point A. Traveling at 1.5 m.p.s., the screen made a complete circuit in 5.5 seconds.

Model II

A second traveling screen was designed to eliminate the drag of the screen as it traveled through the water on its return upstream. This was accomplished by lifting the screen out of the water on its return upstream.

Figure 6 is a schematic drawing of model II. The screen traveled from the upstream end F to the downstream sheave G on a 20° angle to flow G. At point G the screen passed around a sheave and turned into the flume at

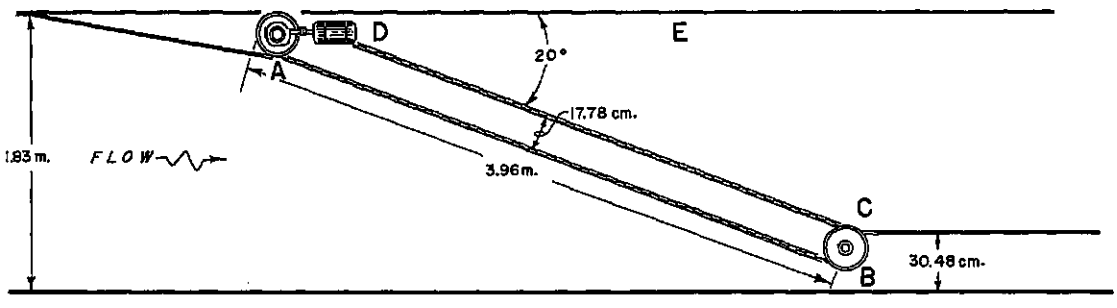

Figure 5.--Plan view of horizontal traveling screen, model I.

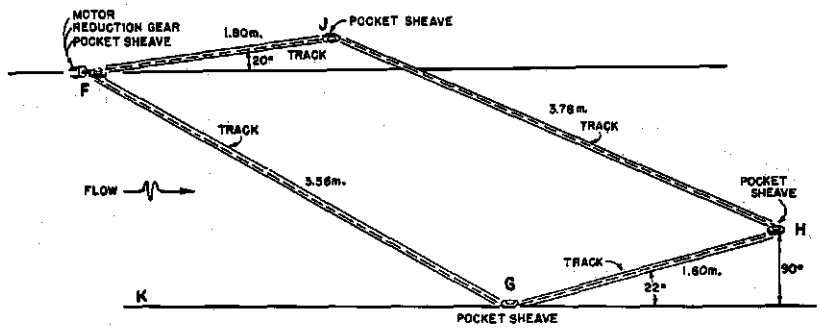

Figure 6.--Horizontal traveling screen, model II.

a 20° angle; the screen also began lifting at an angle of 22°. By the time the screen reached point H it had been lifted a distance of 61.0 cm. The screen traveled at this height from H to J, where it began descending. By the time it reached F, the bottom of the screen was again in contact with the floor.

Support for the leading face of the screen was identical to that on model I. A major difference between the two systems was that the drive unit and the tracking structure were sloped in model II to bring the screen out of the water for its travel upstream; all sheaves and the track were placed on the same 22° slope.

METHOD OF TESTING SCREEN

To test the traveling screen, we installed it in a flume at the Carson National Fish Hatchery near Carson, Wash., provided a bypass, and tested fish in this system.

Description of Flume

The basic structure consisted of a wooden flume (15.3 m. long, 1.8 m. wide, and 1.2 m. deep) set against the left bank of Carson Creek. A clear plastic window (1.1 m. by 1.8 m.) was installed near the downstream end of the flume to allow observation of response by the fish. Test fish introduced at the upstream end were recaptured at the downstream end of the flume by an inclined screen and trap with a perforated plate. Water came from Tyee Springs, several hundred meters away, at a flow of 1.3 m.p.s., which could be directed completely, or in part, into the flume.

Bypass

A 30.5-cm.-wide bypass was constructed; it was equal to the water depth, with an acceleration of 135 percent of the approach velocity to ensure acceptance by the fish.

Test Fish

Test fish were hatchery-reared spring chinook salmon, 8.9 to 15.3 cm. long, and coho salmon, 5.1 to 7.6 cm. long. The fish were dip-netted from a raceway and transported in containers to the upstream end of the flume. Water velocities tested were 1.0, 0.8, and 0.5 m.p.s. All the fish that migrated down the flume were guided by the screen into the bypass and swept over an inclined screen into a trap.

EFFICIENCY OF THE SCREEN

Placement of the traveling screen units at a small (20°) angle to the flow enabled the young fish to move into the bypass without becoming impinged against the screen.

All of the chinook and coho salmon tested at velocities of 0.5, 0.8, and 1.0 m.p.s. were guided into the bypass and trap (table 1). These high efficiencies were due to the perfect operation of the sealing system (at either end and along the canal floor) and the small size of the screen mesh.

Loss of head across the screen was small for both models. The loss was higher on model I because the screen remained in the water during its return upstream. There was no indication that head loss could be reduced by increasing the speed of the screen.

To study the effect of debris on the traveling screen we threw grass, moss, leaves from

Table 1.--Summary of number of fish and number of tests run at different water velocities; all fish entered the bypass

Species	Water velocity (m.p.s.)					
	1.0		0.8		0.5	
	Fish	Tests	Fish	Tests	Fish	Tests
	Number	Number	Number	Number	Number	Number
Chinook salmon	1,790	5	1,537	4	2,326	8
Coho salmon...	1,407	5	1,838	6	2,140	9

trees, and twigs into the flume above the screen. When the travel rate of the screen was equal to the velocity of the water, the debris was not forced into the meshes. As the screen turned away from the entrance to the bypass, material that had contacted the screen separated from it and entered the bypass.

Even though the two systems operated efficiently, we recognize that modifications in design will be required in a prototype facility.

ADVANTAGES OF THE SCREEN

On the basis of 2 years of operating the Carson Hatchery flume, we believe the traveling screen has certain advantages:

1. Operational efficiency of the facility remains high irrespective of fluctuations in depth of the water.
2. Higher allowable approach velocities are possible--if the fish were forced against the screen, they would be carried to the bypass and released.
3. Operational wear is potentially less than in industrial water screens, because all traveling units for support of the screen are above water.
4. The traveling screen is self-cleaning.
5. Loss of head is small in model II--only single screening is involved in contrast to double screening for the drum and industrial water screens.

The rate at which the screen moves depends on the amount of impingement, if any, and debris load. The rate must be adjusted so that small fish swept against the screen by the current will be carried into the bypass and released. Heavy debris loads could create loss of head and require faster travel to keep the screen clean.

In other systems, the juvenile migrants are either injured when dashed against drum screens and industrial water screens, or lost when swept through louvers. Migrants are not aided in reaching a bypass. Therefore, screens of existing systems require considerable attention during periods of turbulence and high velocity. In contrast, such conditions are of far less consequence when the traveling screen is used because the fish swept onto the screen are carried to the bypass and released.

This research has provided a basis for several new traveling screens which are either in the design stage or under construction. Engineering improvements have provided the cable-suspension systems to reduce installation costs, cantilevered stiff-legs to counter water pressure, relatively inexpensive but durable nylon netting, and more efficient track, carriage, and power-drive systems.

LITERATURE CITED

BRETT, J. R., and D. F. ALDERDICE.
1958. Research on guiding young salmon at two British Columbia field stations. Fish. Res. Bd. Can., Bull. 117, 75 pp.

MS. # 1846