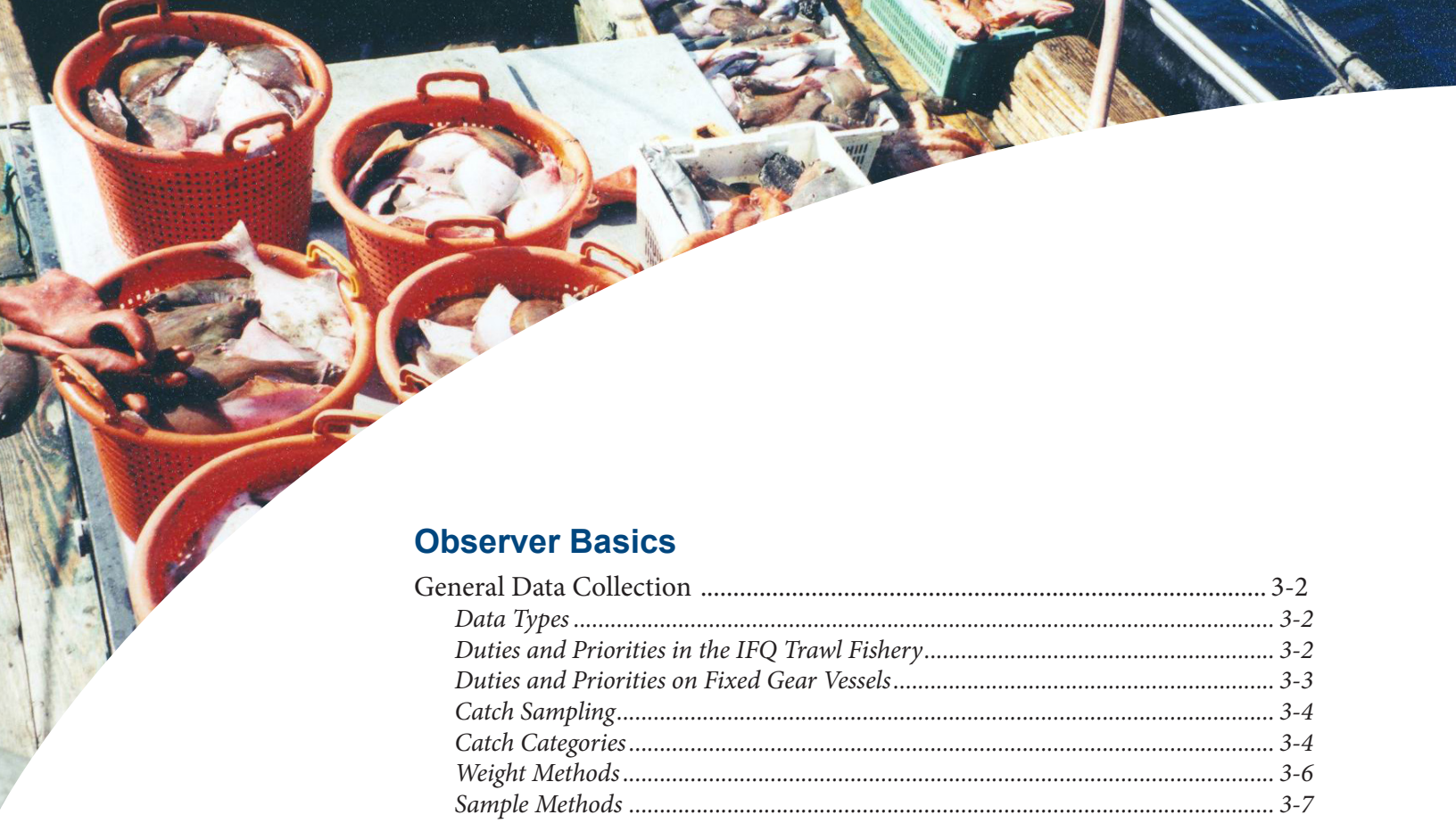

Observer Basics

General Data Collection 3-2

Data Types *3-2*
Duties and Priorities in the IFQ Trawl Fishery *3-2*
Duties and Priorities on Fixed Gear Vessels *3-3*
Catch Sampling *3-4*
Catch Categories *3-4*
Weight Methods *3-6*
Sample Methods *3-7*
Reason for Discard *3-8*

Introduction to Random Sampling Theory 3-10

Documentation and Recording 3-12

Data Forms *3-12*
Data Rounding Rules *3-14*
Observer Logbooks *3-14*
The Logbook as Evidence *3-15*

Additional Policies 3-17

Observer Total Catch (OTC) and Sampling Method Description Forms *3-17*
IFQ Priority Species Tracking Form Instructions *3-23*
Catch Share Species ID Requirements *3-25*

3

Introduction

Information on general data collection and documentation is presented in this chapter. This information applies to data collection/recording on all vessels and gear types observed by the WCGOP. For a more in-depth break down of Catch Share sampling, weight methods and documentation refer to Chapters 4-6. Chapter 10 *Observer Life* covers additional information about WCGOP observer policy.

General Data Collection

This section details the building blocks of sampling for the WCGOP.

Data Types

Fisheries managers and scientists ask observer programs to collect an assortment of data, as they are often the only independent participants in a fishery. There are five data types observers provide to managers and scientists:

1. **Fishing Effort Information:** This data is used by managers to understand where people fish, types of gear used, and target species.
2. **Catch Information**: This information includes how much was caught, what species made up the catch, and the percentage of each species retained and discarded.
3. **Species Composition**: Species composition data is used to estimate relative abundance of each species in a haul. It includes the species specific weights and counts.
   - Species composition information includes reason for discard. Fisheries scientists are interested in the fundamental reason discarding occurs.
4. **Biological Data**: Biological data is used by stock assessors to gauge the age composition of the population, the length to age ratio, the potential spawning population, and the male to female ratio. It includes sex, lengths, weights, and otoliths for individual fish.
5. **Other**: This includes data not necessarily used by fisheries managers but important to ecosystem management. This data type includes information about protected resources, such as marine mammals, sea turtles, seabirds and other ESA-listed species.

Given direction by managers and scientists, the WCGOP sets priorities and designs protocols for data collection.

Duties and Priorities in the IFQ Trawl Fishery

Use this list as a reminder of data to be collected and to prioritize when all duties cannot be accomplished.

Observer duties for the Trawl IFQ Fishery are:

1. Record incidental takes and collect appropriate biological information from protected species, including marine mammals, sea turtles, seabirds, green sturgeon, and salmon.
2. Record fishing effort information, including location, time, date and depth for all hauls/sets.
3. Record interactions of marine mammals, sea turtles, and seabirds with fishing gear. Document sightings of all ESA-listed species.
4. Estimate total catch weight (OTC), even for tows with 100% discard.
5. Estimate weights of IFQ species, in the following order. Mixed catch categories **must** be sampled for species composition.
   - Collect actual weights for **retained and discarded** priority rockfish species: Boccaccio, Canary, Yelloweye and Cowcod.

- Determine **discarded** weight of other overfished species: Darkblotched, POP, and Petrale sole.

If catch weight is less than 1000 lbs., use Actual Weight, Bin Volume, or Basket Weight Determination.

If catch weight is greater than 1000 lbs., the use of Visual Spatial is allowed.

- Estimate weight of Pacific halibut by tallying 100% and taking actual lengths/viabilities on all, or a randomly selected subsample.
- Determine **discarded** weight of all other (non-overfished) IFQ species
- Make visual estimates of retained overfished Darkblotched, POP, and Petrale sole.

6. Estimate **discarded** weight of non-IFQ species.
7. Complete the IFQ Priority Species Tracking Form (non-hake fisheries only).

Priorities 1 – 7 must be completed on ALL hauls

8. Sample **discarded** non-IFQ species for species composition.

At a minimum, non-IFQ discard must be sampled for species composition on every third haul.

9. Record weight, length, sex, and take necessary dissections from tagged fish.
10. Complete species identification forms.
11. Take biological samples, including length, sex, otoliths, tissue, etc. from discarded individuals
12. Maintain observer logbook.
13. Document sightings of ESA listed species.
14. Document sightings of non-ESA listed marine mammals and seabirds.
15. Compile data and enter trip within three days of disembarking.

Duties and Priorities on Fixed Gear Vessels

1. Record incidental takes and collect appropriate biological information from protected species: marine mammals, sea turtles, seabirds, green sturgeon, and salmon.
2. Record interactions of marine mammals, sea turtles, and seabirds with fishing gear.
3. Record fishing effort information, including location, time, date, and depth for all hauls/sets.
4. Conduct hook counts per segment, or count all hooks.
5. Verify total segments per set.
6. Tally sample for species composition:

   a. Tally sample 100% of the gear for species composition.
      - If this is not possible a minimum of 50% of the gear is to be tally sampled.

   b. Count all **retained and discarded** fish by species, or species group.

   c. Verify the number of segments, or hooks, in your sample.

   d. Sample Pacific halibut:
      - Estimate the length of all PHLB (longline vessels).
      - Measure all PHLB and take viabilities (trap vessels).

   e. Tally sample discards by discard reason.

   f. Obtain weights of fish:
      - Target species: obtain an average weight subsample of at least 30 individuals
      - Bycatch species:

- Weigh all individuals
- If this is not possible, take a minimum subsample of at least 15 individuals for average weight.

7. Complete an IFQ Priority Species Tracking Form for every haul.

Priorities 1- 7 must be completed on ALL hauls

8. Record weight, length, sex, and take necessary dissections from tagged fish.
9. Complete species identification forms.
10. Take biological samples, including length, sex, otoliths, tissue, etc. from discarded individuals.
11. Maintain observer logbook.
12. Document sightings of ESA listed species.
13. Document sightings of non-ESA listed marine mammals and seabirds.
14. Compile and enter trip within 3 days of disembarking.

The duties listed above are those typically performed while at-sea. However, the WCGOP may instruct observers to collect additional data.

Catch Sampling

The WCGOP samples catch in two very different ways, total catch sampling and discard sampling. The method used is totally dependent on gear type. WCGOP observers are deployed in both net (trawl) fisheries and fixed-gear (hook and line or pot) fisheries. The gear types differ substantially in how the fish are brought on board the vessel, which is the driving force behind the different sampling strategies.

- **Net (trawl) vessels:** Trawlers bring all of their catch onboard at the same time. The catch is dumped on the deck and the quantity of fish on deck can range from 100's of pounds to 1000's of pounds. Catch Share observers sample retained priority species but focus mainly on discarded catch, in order to reduce the amount of fish that needs to be sampled. Retained catch is primarily estimated by the skipper of the vessel.

- **Fixed Gear vessels**: Hook and line vessels bring their catch aboard one fish at a time. Pot vessels bring their catch aboard one pot at a time. Catch weight per pot varies from a single fish to 100 or more pounds. This results in a reasonable quantity of fish coming onboard at one time, allowing observers to estimate total catch (retained and discarded) on fixed gear vessels.

Due to the sampling strategies of WCGOP, documentation of catch is unique and can be confusing to new observers, as well as experienced observers from other programs. In order to allow for these different strategies, an additional level of groupings (above the species level in most cases) is required. The WCGOP calls these higher levels of groupings catch categories.

Catch Categories

Catch categories are species groupings that are based on either marketing categories or naturally occurring associative species complexes. A catch category may be confined to a single species or may include several species.

Catch (market) categories are a unit of categorization used on the West Coast. Catch categories are used by processors to aggregate species based on color and/or cohabitation.

The result is landings which are documented by catch category, not necessarily species. The WCGOP also uses catch categories when sampling. (See "Figure 3-1: Flow of WCGOP Sampling." on page 3-5) There are two reasons why catch categories are used:

- **Matching observer data to landings**: Since retained catch is recorded by catch category, the most efficient method of matching observer collected data to landings is by using catch categories.
- **Better estimates of priority species**: The WCGOP sampling protocol allows for more precise sampling of species of high concern. Observers can focus their effort on overfished species and/or prohibited species to get the best estimates possible while using less precise methods for other species.

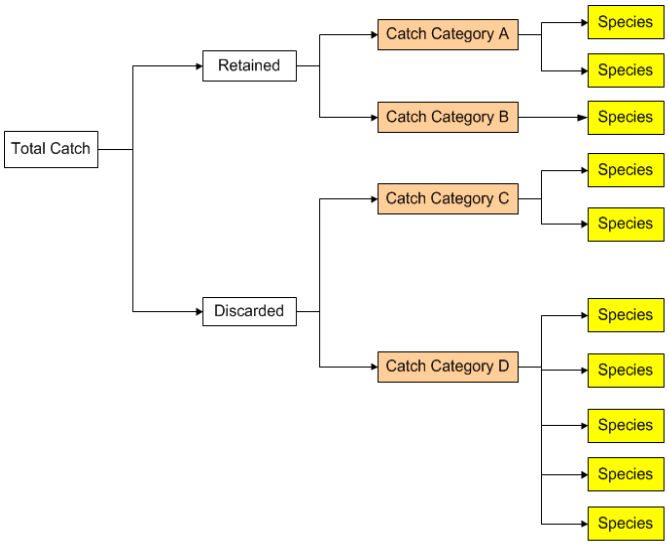

Figure 3-1: Flow of WCGOP Sampling.

To determine whether or not species should be placed within the same catch category, use the following rules:

- Retained and discarded catch are always in separate catch categories.
- Individuals are grouped in the same catch category when they are sampled together. All individuals in the grouping must share the same weight method and sample method. (Weight and sample methods explained below).

There are slight differences between gear types in defining catch categories. Chapters 4, 5, and 6 discuss defining catch categories on specific gear types.

Naming Catch Categories

A list of catch categories and the corresponding three or four letter PacFin codes can be found in the Catch Categories List *(see Appendix pg.12)*.

There are two rules for naming catch categories:

1. If the catch category is sampled for species composition, the name of the catch category is irrelevant. Sampled catch categories are usually named ZMIS.
2. If the catch category is not sampled, the most descriptive name in the Catch Categories List should be used. The following codes should be used when a catch category is not species composition sampled AND a more descriptive catch category code is not available:
   - **INVT**: Invertebrate discard that is not species composition sampled.

- **MBOT**: Miscellaneous bottom items, including rocks, mud, logs, bones, garbage, and miscellaneous invertebrates that are discarded and not species composition sampled.
- **NIFQ/ IFQM:** These are the acceptable catch category codes for unsampled hauls in the Catch Share program on trawl vessels
- **UNST:** This is an acceptable catch category code for unsorted discarded catch that contains both Retained and Discarded species (e.g. unsorted catch is washed overboard).

Weight Methods

Weight methods are used to explain how the weight of the total catch was determined and how the weight of a catch category was determined. Because the WCGOP covers a very diverse fleet, 13 weight methods have been developed to obtain total catch and/or catch category weights.

1 - Actual Weight: When everything within a catch category is physically weighed. This method can be used for catch category weights.

2 - Bin/Trawl Alley Volume: A catch category is placed within a measurable unit, then a volume and density are used to calculate the total weight. This method can be used for catch category weights.

3 - Basket Weight Determination: All of the individuals within a catch category are placed in observer baskets. Some, but not all, of the baskets are actually weighed (5 baskets out of 10 baskets, for example). The average weight of these baskets is applied to the total number of baskets filled. This method can be used for catch category weights.

5 - OTC – Retained: Subtracting retained estimates from observer total catch weight (OTC) gives the total discard weight. This method is used when a haul is not sampled due to injury or illness on net vessels. This method can be used for discarded catch category weight only.

6 - Other: Weight method 6 is most commonly used to document unsampled or incorrectly sampled hauls. When an OTC is not taken due to observer illness, safety, or other reason, weight method - Other is recorded to allow OTC calculation from like hauls. This weight method should not be used intentionally in any other circumstance, but is also sometimes needed when the weight method used to determine the catch category weight cannot be accurately described with one of the other weight methods. This sometimes happens when weight methods are "mixed". In this case, the most important thing is to thoroughly document how sampling was done on the deck forms and logbook. This method can be used for total catch and catch category weights.

7 - Vessel Estimate: The vessel estimates how much is caught by catch category. This method is used for retained catch categories on trawl vessels (non-overfished species only). Weight is usually copied directly from the vessel's logbook after a haul.

8 - Extrapolation: The total number of individuals of a species is multiplied by an average weight to estimate the catch category weight. This method can be used in situations where weighing all individuals of a species is impossible but it is possible to count them. A variation of this method can also be used to estimate total catch weight on fixed gear vessels.

9 - PHLB Length/Weight Conversion: The lengths of individual Pacific halibut are actually measured (or visually estimated on longline vessels). A length-to-weight conversion table is then used to arrive at a weight. This method can be used for Pacific halibut catch categories only.

11 - Retained + Discarded: If all of the catch is sampled on a hook or pot vessel, the sum of the catch categories is used for total catch weight. This method can be used for total weight catch only.

13 - Tally Sample: A total count of each species/species grouping and an actual or average species weight is used to determine catch category weight. This method can be used for catch categories on hook or pot vessels only.

14 - Visual Experience: Weight of the catch category is estimated by sight only. This method is used in instances where an individual is too large to weigh, when fish are discarded without being brought on board, and other similar circumstances. This method should always be used for total catch weight on net vessels. It can also be used for catch category weight.

15 - Visual Spatial: Weight of the catch category is estimated based upon a spatial known. Catch weight is determined by visually dividing the alley or checker into equal units, collecting catch from 1 or more and multiplying the sample weight by the total number of units. This method is used extensively for catch category weight on net vessels.

19 - PHLB Length/Weight Extrapolation: This weight method is similar to weight method - 9, in that the weights of Pacific halibut are derived from converted lengths. However, this weight method is used when the observer tallies all Pacific halibut in the catch category and takes a subsample for lengths. The weight of the catch category is determined by multiplying the total number of Pacific halibut tallied by the average length/weight conversion of the subsampled individuals.

Sample Methods

Sample methods are used to explain how a species composition sample was collected from a catch category.

1 - Whole Haul: When all individuals within a catch category are sorted to species, weighed, and counted.

2 - Single Basket: When a single basket subsample is taken to determine the species composition of a catch category.

3 - Multiple Basket: When more than a one basket subsample is taken to determine the species composition of a catch category.

4 - Fixed Gear Sample: When all individuals within a catch category are counted and an independent, actual, or extrapolated weight is obtained.

5 - Fixed Gear - Fish Ticket Verified: When all individuals in a catch category are counted, but not independently weighed. Instead, the fish ticket weight is verified and used.

6 - Fixed Gear - Fish Ticket Unverified: When all individuals in a catch category are counted, but not independently weighed. Instead, the fish ticket weight is NOT verified and used regardless.

The weight methods and sample methods used to sample a haul/set depend on the gear type of the vessel, how much is being caught, and vessel layout. Later chapters deal specifically with using weight and sample methods by gear type. However, understanding the use of catch categories and remembering the two rules for defining catch categories is essential to WCGOP sampling.

Sample Methods are also used on Length Frequency and Biological Specimen Forms, see Chapter 7, *Biological Sampling* for more information

Reason for Discard

Fishers discard for a variety of reasons and this information is important to managers. Observers document the **crew's reason** for discarding, even if the crew is mistaken regarding a regulation or the marketability of the species in question. **The procedure for determining the reason for discard is to ask the captain or crew why they are not retaining each species or item.** If the reason is obvious, such as for starfish or garbage, it is not necessary to ask the crew. However, if there is more than one possible reason for discard, interview the vessel crew to determine why the catch is not being retained. Avoid making assumptions.

There are nine reason for discard codes to choose from:

11	Incidental/Accidental
12	Drop-off
13	Market
14	Other
15	Predation
16	Regulation
17	Safety
18	Market (dockside only)
19	Utilized on Board

11 - Incidental/Accidental: Crew or observer inadvertently discards fish that should have been retained.

Examples:

- **Crew effort**: Fish missed during the sort.
- **Mistakes**: Crew/observer didn't know captain wanted to retain the fish.
- **Quantity**: The fish hold or tanks are full, so the remainder of catch is discarded (no apparent **high-grading**, there is simply no more room for catch).

12 - Drop-Off: This reason is used for **hook and line gear only**. Drop-offs are fish that **would have been retained** had they not fallen off the gear.

13 – Market: Discarding that is driven by consumer demand and vessel/processor profitability. This includes **high-grading**. This is the most common reason for discard.

Examples:

- **Too small**: Market pays less for fish under a certain size (a.k.a. high-grading).
- **Too big**: Market pays less for fish over a certain size (a.k.a. high-grading).
- **Price**: Fisher doesn't want to use ice or space in hold for fish that have less value than other target species (e.g. arrowtooth discarded that could be kept and sold).
- Fisher wants to keep plant/market happy; wants to deliver best quality to customer to maintain good reputation – market will buy it, but prefers other species/sizes.
- **Damaged fish**: Squashed, maimed or damaged (fish carcass torn up by other events not by predation).
- **Quantity/amount:** Market won't buy species in such a small quantity (although species may be retained later if a lot is caught).
- Fish left over from previous haul (on the deck or in the net).
- Time and effort to prepare the species for market too great (examples: skate wings, dressed sharks).
- Partially sorted catch discarded because its value is not worth the effort or time to keep sorting.
- Market will not buy species if under or over a certain size (this might include weigh-backs).

- **Condition**: Market won't buy fish of a certain condition (e.g. deep Dover, diseased or mutant fish).
- **Freshness/time spent on ice**: Species won't be retained until near the end of the trip because quality quickly deteriorates.
- **Market will only buy a certain amount of fish at a time**: The plant says that they will buy 500 lbs of longnose/bignose skates, but the vessel catches 800 lbs. 300 lbs are discarded.).
- Market does not buy that species.
- Market is not buying that species at this time.
- Species has no market value when caught with a particular gear type or in that fishery (e.g. smashed urchins).
- Invertebrates with no known marketability.
- Miscellaneous objects/garbage/trash.
- Mud/Kelp/Wood/Rocks.
- Fisher dumped **unsorted** catch, either directly from codend or from deck because it is undesirable (i.e. catch is full of undesired species such as Pacific dog sharks, ratfish, small flats, or some mix of undesired species).

Note: Always record the **primary reason for discard.**

Example: Too small, if a longline vessel is not retaining dogfish sharks for market reasons and a dogfish shark drops off the line, it would not be recorded with reason for discard as drop-off. The primary reason for discard is still market.

14 – Other: Used for discard reasons which do not fit into any of the other categories. **Document the reason for discard thoroughly on the paper forms and in the database.**

15 – Predation: Used mainly on hook or Pot vessels. Fish that **would have been retained** if not damaged by predation. This includes predation by marine mammals, destruction by hagfish, sand fleas, and other invasive organisms, and any other animals.

16 – Regulation: Discarding due to quotas, limits, and other restrictions mandated by state and/or federal agencies. This includes perceived quotas, limits, and other restrictions by the captain and crew.

Examples

- Prohibited Species (P. halibut, salmon, or Dungeness crab {regionally}).
- Species other than P. halibut, salmon or Dungeness crab, which are not allowed for retention, such as state prohibited species (e.g. giant {black} sea bass).
- Fishing is not presently open for that species.
- Fish cannot be retained or targeted by a particular gear type.
- Fisher lacks the necessary permit for retention of that species.
- Vessel/fisher has met quota for that species.
- Size Regulation: Fish cannot be retained if under or over a certain size (e.g. small lingcod).
- Marine Mammal, seabird, or sea turtle.
- ESA-listed species (green sturgeon).
- Fisher is unsure of regulations – it is not known if vessel is able to retain a species or not, so they discard it to play it safe.

17 – Safety: Discarding due to a concern about vessel and/or crew safety.

Examples

- Weather
- Vessel mechanical problems.
- Crew fatigue.

High-grading: Discarding of marketable fish to maximize profit.

- Size of the catch or the catch composition makes it dangerous to bring catch on board or to complete sorting.

18 - Market (Dockside only): Previously retained fish discarded at the dock or on the way in from a trip due to market reasons.

19 - Utilized on Board: A special discard reason that captures fish consumed at sea or used as bait during a trip. It is important to ensure that these fish are not double counted if they have already been included in another sample. Also, if these fish cannot be attributed to a particular haul, they should be documented on a Trip Discard Form.

Introduction to Random Sampling Theory

Random sampling is used by observers to ensure unbiased data collection. Observers take **subsamples** from a population when it is not possible to count, weigh and/or measure every individual within the population. When random sampling is used to subsample, **every member of the population has an equal probability of occurring in the sample.** If every member of the population is equally likely to occur in the sample and sampling is repeated over time, then the collection of samples can be used to draw conclusions about the population.

Advantages of Random Sampling

The use of random sampling eliminates subjectivity and ensures managers, fishers, and other end users that observer data are not biased for or against the fleet.

When random sampling methods are used to collect data, NOAA Fisheries is justified in using statistical methods for estimating population parameters based upon that data.

Steps in Taking a Random Sample:

1. **Define the population.** The population is the total set of items that we wish to draw inferences about. Populations observers take samples from include:
   - All the individuals in a haul.
   - All the individuals in a Catch Category.

2. **Define a sampling frame.** A sampling frame is a conceptual framework, which divides the population into independent, countable sampling units. For example: a **Spatial frame** is based on a unit of space or a unit of gear. Examples would be:
   - **Space Unit:** Checker bin, Trawl Alley, or Baskets.
   - **Gear:** Skate, Tub, Pole, Stick, or Pot.

3. **Define your sample units.** It must be possible to collect *all* individuals within a single unit. Be sure not to use sample units that are so large it may be impossible to collect all individuals. Example:
   - **Spatial:** A trawl alley is divided into six sections. Each of the six sections is a sample unit.
   - **Baskets:** A total of 20 baskets of discarded fish in a haul. Each basket is a sampling unit.

4. **Number all of the sample units in your sampling frame.** If your units are sections of deck or individual baskets, assign a number to each. Gear segments on fixed gear vessels can also be numbered consecutively.

5. **Pick random numbers to choose which units to sample.** Generate random numbers between 1 and your maximum sample unit number (inclusive) to

Subsample: A portion of a population. It can be used to make inferences about the population as a whole if collected in a random fashion

determine which sample unit(s) to select. You will be given a random number table during training, there is one in the WCGOP Field Manual, and another can be found in the Random Number Appendix. Dice, the second hand of a watch, and numbered pieces of paper are other options for generating random numbers.

6. **Select the sample units corresponding to the random numbers.** This is your sample.
   - **Spatial:** Collect all of the individuals from each randomly selected deck section or gear unit.
   - **Baskets:** Collect all randomly selected baskets of discard for your sample.

Random Systematic Sampling

Another way to take a random sample is to set up a random systematic frame. Random systematic sampling can only be used when you know, or have a reasonable estimate of, the **total** number of sample units. Systematic sampling involves taking a sample during every "n^{th}" defined sample unit. For a random systematic frame, randomize the selection of your first sample unit and then take every "n^{th}" unit thereafter. The steps for taking a random systematic sample are:

1. Define the population.
2. Define a sampling frame.
3. Define the sample units and determine the total number of sample units.
4. Number all of the sample units in the sampling frame.
5. Determine how many of the sample units you want in your sample.
6. Divide the total number of sample units by the number of units you want in your sample. This gives you your value for "n".
7. Randomly select a number between 1 and n. This will be the first sample unit in your sample.
8. Sample every n^{th} unit thereafter.

Example

There are 100 baskets of fish that need to be sampled.

1. Define population: 100 baskets of fish.
2. Define sampling frame: Random Systematic, using baskets.
3. Define sample units: Individual baskets of fish.
4. Number all sample units: Baskets numbered as 1 – 100.
5. Determine how many sample units to sample: Decide to sample 20 baskets.
6. Calculate value of "n": 100/20 = 5.
7. Randomly select a number between 1 and "n": Use random number table to select 2.
8. Sample baskets **2**, **7**(2+5), **12**(7+5), **17**(12+5)..... **97**(92+5).

Note: If you are sampling **more than** half of the sample units, calculate n based on the number of sample units that will **not** be sampled. Randomly select a number between 1 and n and that will be the first sample unit you skip. Skip every n^{th} unit thereafter.

Later chapters include in depth discussions on applying random sampling protocols.

Documentation and Recording

Consistent data documentation is imperative to ensuring data quality. This section introduces the data forms and logbook used by observers and gives guidelines for proper data documentation.

Data Forms

Eleven forms are used to record data. Each form functions to collect specific information in a standardized way.

1. **Trip Form:** This form is used to record fishing effort information. This includes latitude, longitude, depth, date, time, fish ticket numbers, landing date, target species and gear used. Observers also record total catch estimates, hook counts (when needed), and gear performance. A trip form is completed for every fishing trip observed.

2. **Catch Form:** Catch category information is recorded on this form. On Trawl vessels it records the **total weight** of each catch category in the haul. On Fixed Gear vessels the Catch Form is used to record the **observer sample weight** of each catch category in the set.

3. **Species Composition Form:** This form is used to record species compositions of catch categories and the reason each species is discarded.

4. **Length Frequency Form:** This form is used to record sexed and unsexed lengths of fish when no other biological data is collected.

5. **Biospecimen Form:** This form is used when biological information, in addition to sex and length, is collected from an individual and any time a dissection is taken.

6. **Trip Discard Form:** This form is used to document any discarded fish that cannot be attributed to a specific haul. For example, a vessel may decide to discard fish that have already been put into the hold. These fish can only be attributed to the trip as a whole, not to a specific haul.

7. **Species Identification Forms:** There are four different Species Identification Forms:
   - Rockfish
   - Flatfish
   - Skate
   - Miscellaneous

Observers are required to fill out a Species ID form for every species encountered. Data quality hinges on observers ability to correctly identify fish to species. WCGOP observers are trained in species identification during the initial training and are also required to take yearly fish identification tests during annual briefings or trainings. These procedures provide the WCGOP evidence of each observer's fish identification competency. Additional details regarding completion of Species ID forms can be found at the end of this chapter in the *Additional Policies* section.

8. **Marine Mammal, Seabird, and Sea Turtle Interaction and Sighting Form:** This form is used to document sightings of marine mammals, seabirds, and sea turtles as well as interactions that occur between these species and fishing operations.

9. **Sea Turtle Life History Form**: This form is used to document specific characteristics of Sea Turtles that have interacted with fishing operations.

10. **Tagged Fish Form:** This form is used to record specific information from tagged fish.
11. **Sampling Description Forms:** Observers complete these forms to document how and why a particular weight method was used during a trip. At minimum, a form is required whenever a weight method is used for the first time. There are two separate Sampling Description Forms:

    - **OTC Sampling Description Form**: This form is specific to WCGOP's OTC methods. Used to document sampling for one or more of four weight methods.
    - **Sampling Method Description Form:** This form documents the use of WCGOP's catch category and species composition sampling methods along with any associated biosampling.

See the *Additional Policies* section for a more in depth description.

Completing and Organizing Forms

During an average day on a vessel, observers will fill out at least three different forms (usually several of each!). **Data forms should be completed in pencil.** Only observer logbooks and sampling description forms should be completed in ink.

Legibility

Observers must record their data in an organized and legible fashion. This decreases the number of calculation, transcription, and data entry errors. If a debriefer cannot interpret some piece of data, the observer is required to thoroughly explain the data during the debriefing interview. This will greatly increase debriefing time. As it is often impossible to recall data that was collected two months prior, this may result in lost data. To ensure legibility:

- Write carefully in clear, dark writing.
- Record the data in an organized manner.
- Document formulas that are used and label all calculations with units.

Recording Time

When recording time, use the 24-hour clock (0000-2359) and Pacific Standard Time (PST). Note that no colons are used with the 24-hour clock and should not be recorded on any forms. **Always record time with four numerals.**

Page Numbering

It is important to use a standardized method of page numbering for the data forms for each trip. All observers must use the same page numbering method for their data forms. This allows debriefers to easily and quickly review data and aids data editors in detecting missing information.

- **Trip Form: Haul Locations/Hauls:** These forms are numbered sequentially within a trip.
- **Trip Discard Form:** These forms are numbered sequentially within a trip.
- **Catch Form, Species Composition Form, Length Frequency Form, and Biospecimen Form:** These forms are numbered sequentially (in this order) within a haul.

Always have the manual near when filling out paperwork. Review the form instructions prior to completing forms and refer to the examples often. This will save time by ensuring the forms are filled out correctly and completely the first time.

- **Marine Mammal/Seabird/Sea Turtle Sighting and Interaction Form and Tagged Fish Forms:** These forms are not numbered.

Example: The observed fishing trip lasts one day, and there are two hauls that were sampled. On the way to the processor, the vessel discarded some fish from the hold. The page numbering would be:

Trip form	1 of 1	
Trip discard form	1 of 1	
	Haul 1	**Haul 2**
Catch form	1 of 5	1 of 3
Species Composition form	2&3 of 5	2 of 3
Length Frequency form	4 of 5	none
Biospecimen form	5 of 5	3 of 3

Data Rounding Rules

When performing a calculation, carry the numbers out full field until the final product is determined. Full field includes all the numbers on the calculator. Rounding within a calculation reduces its precision. Do not round any numbers within a calculation!

To round the final product:

- Look only at the first digit to the right of the number being rounded.
  - If X $\geq$ 5 round up.
  - If X <5 round down.

Example:

1. Observer counts 49 fish but can only weigh 12 fish.
2. The weight of 12 fish = 54.65 lbs.
3. The calculated avg weight = 54.65/12 = 4.55416667 lbs.
   - **Incorrect:** Weight of 49 fish if average weight is rounded to 2 decimal places: 49 fish * 4.55 lbs. = 222.95 lbs.
   - **Correct:** Weight of 49 fish if average weight is kept full field: 49 fish * 4.55416667 lbs. = 223.154167 lbs. This value would be rounded to 223.15 lbs.

If average weight were rounded, an incorrect value would be recorded on the data form for the weight of the 49 fish.

Observer Logbooks

The Observer Logbook is the field biology notebook used by observers while at sea. It is used to document sampling methodology, events that affect data collection, and any interference and/or inappropriate behavior. Be professional in logbook documentation. Do not use it as a personal journal by venting frustrations or making derogatory remarks. Observer logbooks are turned into the debriefer monthly, or when requested by the debriefer. The logbook should contain information on all trips (delivered) during the month.

Observer Logbook Entries

The logbook a critically important piece of data because it contains detailed and supportive information about all other data. Have the logbook present when completing paperwork so notes regarding data collection and compliance issues can be documented.

The logbook must be kept private while on the vessel, but it is a public document and is turned over to NOAA

Fisheries during debriefing. The contents of the logbook and the observer's name may be released if a Freedom of Information Act (FOIA) request is approved.

The Logbook as Evidence

Logbooks are archived and used as a reference to give more information about the data. They may also be used as evidence if regulatory infractions were noted. If corrections need to be made, draw a single line through the incorrect word(s) and continue with the correct wording.

Do not black out anything, use correction fluid, or tear out pages or parts of pages! Always use INK!

If any part of an original entry is completely obscured, it leaves the reader wondering what was originally documented. This may affect the validity of the logbook and data.

Logbook Sections Overview

Logbooks are mailed along with completed data at the end of each month. The observer logbook is divided by tabs into 8 sections, each of which should be completed before mailing. Below is a brief description of each section.

Title page: The observer's name and the date range (MM/DD/YY) for which the Logbook was used should be clearly indicated here.

List of Vessels: This section is used to list each vessel embarked on and the trip dates associated with the vessel. It is very likely that more than one vessel will be observed during each period. List the vessel names and USCG registration number or the state registration number, as applicable. Write the first and last name of the captain that ran the vessel. If there was more than one skipper during a trip limit period, indicate this and include all names. Use the "Embark/Disembark date" lines to list the dates on which the vessel embarked as well as the dates the vessel returned to port. It is only necessary to list each vessel once.

Calendar: A calendar is provided for observer use.

Vessel safety: Prior to boarding a vessel for the first time, observers are required to check the vessel for safety equipment required by U. S. Coast Guard regulations. The "Vessel Safety" section lists items that should be inspected before leaving on the first trip on the vessel. The "Vessel Safety Checklist" pages should be used to document that each item was checked, to make comments on each item, and to document the appropriate dates associated with some items.

A copy of the Vessel Safety Checklist must be sent to your provider prior to leaving on the first trip aboard a vessel.

Logbook pages should never be torn out, rather photocopies should be made. For more information regarding the vessel safety checklist, see Chapter 9, *Health and Safety Information* and Chapter 10*, Observer Life.*.

> **Tip:** If you have a high resolution camera phone, you should be able to text a photo of the safety checklist to the provider.

Observer safety survey: Complete a Safety Survey for each vessel observed during a trip limit period. This survey provides important safety information for the WCGOP coordinators to track any issues or problems associated with a vessel. For more information regarding vessel safety see Chapter 9, *Health and Safety Information*.

Equipment test checklist: Observers are issued sampling and safety equipment by the WCGOP. All equipment must be maintained and inspected on a regular basis to ensure that it is in proper working condition. The "Observer Equipment Checklist" must be completed once a month. Document the actual date of the gear inspection and go through the list with the equipment at hand. It is important to notify the WCGOP Gear Technician any of the items do not pass inspection. For more information regarding observer gear see**, Chapter 11, *Gear*.**

Scale test record: Calibration of motion compensated scales are done prior to each haul, but every 90 days an overload test will need to be completed at the nearest field station. This date is recorded on the last line of the Marel Scale Inspection section. If hand scales are used, log calibrations every 5th observed day on the Hand Scale Test Record page. Contact the gear technician or a debriefer immediately with any scale related issues. For detailed instructions on how to perform scale tests, see **Chapter 11, *Gear***.

Vessel Diagrams and Trawl Net Identification Key: Vessel diagrams should be completed for each vessel observed. These diagrams detail the layout of the vessel and help debriefers better understand the observer's sampling conditions while on-board. It is especially important to thoroughly document any vessels and gear types that are not typically observed. Diagrams should be large, detailed, well labeled, and include a length estimate of the vessel & deck/trawl alley.

There is a trawl net identification key in the observer logbook on page 37. Use this dichotomous key to verify the net type used on the vessel. It is also very important to pay attention to what net a vessel is fishing if they carry more than one. Never assume you know what type of net is being fished. Verify and record each net used. Also record the skipper's estimate of the maximum capacity (in pounds) of the codend and trawl alley.

Communication Log: The Communication Log can be used to aid in tracking communications with vessels, coordinators, other observers, providers, and any other program related staff. This log is not mandatory but may be helpful for reference. Vessel communications may be listed here, as well, but it is not required. Communications listed here may include:

- Calls to WCGOP staff regarding sampling problems.
- Calls to other observers regarding data or vessel coverage.
- Calls to NMFS enforcement.
- Calls to the Coast Guard.
- Calls to port biologists and port samplers.
- Calls to harbor masters.
- Calls to PSMFC state liaisons.

Photo Log: The Photo Log is used to document

photographs taken by observers with the disposable camera issued by WCGOP. Observers are issued disposable cameras to take photos of marine mammals and work-related activities (portrait of selected vessel or vessel deck, sampling station, unidentified fish, unusual sampling events etc.). Observers should document each photo taken in the photo log soon after the photo is taken. The disposable cameras issued to observers are WCGOP property and will have a barcode label which should be documented in the photo log (disposable cameras are not for personal use). All cameras should be returned to your debriefer for developing and copies of photos can be issued upon request. Replacement cameras can be requested from the gear technician at any time.

Daily Notes Section: The Daily Notes section documents day-to-day events while an observer is at sea. The following information must be documented in the daily notes:

- Specific notes on safety incidents or concerns that occur while aboard vessels.
- Important conversations or unusual occurrences.
- Illnesses or injuries suffered.
- Circumstances surrounding any violation witnessed.
- Problems or challenges encountered while sampling, including times in which the observer was unable to sample.

Make an entry for each day, describing the day's events, even if it was considered an "ordinary day." The more self-explanatory the trips are, the better. Logbooks may be referred to months, or even years, after the trips are completed.

Tip: Many observers make notes on their deck forms in order to jog their memory of particular events that happened while they were out on deck. Set aside time each day to write in the Daily Notes section. Remember that events that seem ordinary on this vessel may be unusual to the fleet or fishery, so don't hesitate to write down any information that affects sampling or day-to-day life aboard a vessel.

Additional Policies

Observer Total Catch (OTC) and Sampling Method Description Forms

These forms are used to indicate which weight methods were employed to estimate OTC and catch category weights and to detail the use of each.

OTC Sampling Description Form: Used to describe one or more of four WCGOP weight methods used to estimate total catch weight and to detail when and how each method was applied.

Documentation must answer any specific questions and generally include:

- When and why method was chosen.
- All random sampling systems employed.
- Explanation of unusual circumstances or gear lost at sea.

Sampling Method Description Form: Used to describe how weight methods are used to estimate catch category weight. This form requires additional detail on how species compositions associated with the weight method were collected and how biological sampling was accomplished.

Documentation must answer specific questions and

address any topics listed in the margin, including:

- When and why the method was chosen.
- Detailed description of sampling frame.
- All randomization techniques employed.
- Species composition sample method(s) used.
- Selection of biolist and biosampled fish.

Sampling Description forms are an important data quality verification tool for staff and must be completed and submitted after using a weight method for the first time. After their initial trips, observers will likely use the same weight method many times, in the same fashion, on multiple vessels. The description form then acts similar to a Species ID form; in that once a weight method is accepted, additional forms are not expected unless there is a major change in sampling. If sampling deviations are apparent from month to month, your debriefer will require an update to the existing description or completion of a new form. Even though each form is tied to a specific trip they are used to describe a general sampling frame and any departure from this frame must be documented in the logbook daily notes.

OTC Sampling Description Form

Observer Name: _____ **Date:** _____

Fishery: _____ **Gear Type:** _____

OTC Weight Method 14 – Visual Experience

Describe how often this particular method was used and why.

_____

_____

_____

How was your weight estimate determined?

_____

_____

_____

_____

_____

Did you see the codend brought on board each haul? _____

If not explain: _____

_____

_____

OTC Weight Method 6 – Other

Describe how often this particular method was used and why:

_____

_____

_____

_____

Did unusual sorting or weight/diversity of catch affect your sampling? If so explain:

_____

_____

_____

_____

Was gear lost at sea? If so explain:

_____

_____

_____

_____

Sampling descriptions must be recorded in pen.

Figure 3-2: OTC Sampling Description Form front

OTC Weight Method 8 - Extrapolation

Describe how often this particular method was used and why.
Include any details on how time or space restrictions affected your decision to use extrapolation.

State how gear units were randomly selected for sampling and how tally period was determined.
Comment on any gear lost at sea.

If hook & line gear was used, describe how and when hook counts were randomly taken.

Record formula used to determine OTC.

OTC Weight Method 11 - Retained + Discarded

Describe how often this particular method was used and why.

If hook & line gear was used, describe how and when hook counts were randomly taken.

Figure 3-3: OTC Sampling Description Form back

Sampling Method Description Form

Observer Name: _____ **Date:** _____

Weight Method: _____ **Gear Type:** _____

Catch Category Method Description

Under what circumstances was this weight method used, how often and why?

_____
_____
_____
_____
_____
_____

Explain how this weight method was used to determine *Catch Weight*. Detail your sampling frame and describe any randomization techniques or tools, if any were used.

_____
_____
_____
_____
_____
_____
_____
_____
_____
_____

Describe any factors that may apply:
- Retained/Discarded
- Total Catch Weight
- Species Diversity
- Handling of Priority Species
- Time Restrictions
- Unusual Sorting

Trawl:
- Collection of sample baskets
- Selection of visual section(s)
- Selection of fish for avg. weight

Fixed Gear:
- % of gear sampled
- Selection of tally periods

Record any formulas used to calculate Catch Weight.

Species Composition Method Description

State which sample method(s) were used and why.

_____
_____
_____

- SM 1: Whole Haul
- SM 2: Single Basket
- SM 3: Multi-Basket
- SM 4: FG Sample

Describe how you sampled for *Species Composition.* Provide details on any subsampling or randomization techniques, if any were used.

_____
_____
_____
_____
_____
_____
_____
_____
_____
_____
_____ Turn page over for biosampling description

If no SC was required record NA.

Trawl:
- How baskets were selected to subsample
- How individuals were selected for avg. fish # calculations

Fixed Gear:
- How individuals were collected for avg wts.
- Any sample weight calculations

Description forms must be recorded in blue or black ink.

Figure 3-4: Sampling Method Description Form front

Biosampling Description

Describe how biolist was randomly selected (*trawl only*).

How were fish randomly selected to biosample if less than 100% were sampled?

If no biosamples were required record N/A

- Detail sampling in Spatial, Temporal or Systematic terms
- If unable to collect samples, explain why
- Describe handling of priority species

Trawl Weight Methods
1 Actual Weight
2 Bin Volume
3 Basket weight Determination
5 OTC – Retained
6 Other
7 Vessel Estimate
8 Extrapolation
9 PHLB L/W Conversion
14 Visual Experience
15 Visual Spatial
19 PHLB L/W extrapolation

Trawl Sample Methods
1 Whole Haul
2 Single Basket
3 Multiple Basket

Fixed Gear Weight Methods
6 Other
9 PHLB L/W Conversion
13 Tally Sample
14 Visual Experience
19 PHLB L/W Extrapolation

Fixed Gear Sample Methods
4 Fixed Gear Sample

Additional Notes:

Figure 3-5: Sampling Method Description Form back

IFQ Priority Species Tracking Form Instructions

The IFQ Priority Species Tracking Form is required to ensure that fish are not removed from a vessel's hold between the time the vessel reaches the dock and the start of the offload.

This form is used to document the retention of Bocaccio rockfish, Canary rockfish, Cowcod rockfish, and Yelloweye rockfish on a haul specific basis. It should be placed in the wheelhouse at the beginning of each trip, updated on a haul-by-haul basis, in view of the vessel's captain. Inform the captain at the beginning of the trip that you need to document numbers and weights for the retained species above. If you are unable to sample a haul, ensure that the crew keeps the retained Bocaccio, Canary, Cowcod, and Yelloweye on deck until you're able to sample. If for some reason you can't sample these species for a given a haul, follow the directions outlined in number 5 below.

1. Each haul, document the weight and count of each retained priority species. Please document zeros in both columns if no individuals of the species were retained.
2. Ensure that the captain of the vessel sees the documented catch each haul. If there is a discrepancy between your number and the captain's, please document in the "Notes" column. Also document any other problems.
3. If you did not sample a haul or you tally sampled less than 100% of a fixed gear set, and the crew did not keep the species on deck until you could count and weigh them, document the haul number in the "Haul" column and "NE" for "not estimated" in the "Weight" and "#" column.
4. If you were able to sample all species each haul, then sum the "Weights" and "Number" columns. Document "Total" in the row at the bottom of the page. If multiple pages are used, document "Total" on the last page.
5. If you were not able to sample all hauls and you have an "NE" documented in any column, then:
   a If the vessel does not want to have you onboard until the offload, they must pull all the retained Bocaccio, Canary, Cowcod, and Yelloweye out of the hold once they're in port or on the way to port. In the "Total" row, document "Total*" and the total weight and count of each species. If the captain agrees with these values, you may disembark. If there are any disagreements, you must remain on board until the offload is complete.
   b If the vessel is unwilling to do "a", then you must stay on the vessel until a catch monitor arrives to relieve you for the offload. If you will act as the catch monitor, you must stay with the vessel until the offload is complete.
      - WHITE copy of the form will be kept by the observer and submitted with trip data.
      - YELLOW copy of the form will be left on the vessel for the catch monitor in a sealed envelope.
      - PINK copy of the form will be left on the vessel for the captain.

IFQ Priority Species Tracking Form

Page ____ of ____

Directions: Observer will place this form in the wheelhouse and document the **retained** weight and number of each species listed for each haul. Observers will document discrepancies between the vessel's weights and the observer's weights in the "Notes" section. Prior to disembarking, the observer will sum the weights and numbers by species and document this in the row labeled "Total", and sign the form.

Observer Name: _____ Vessel Name: _____ Vessel ID #: _____

Trip Departure Date: _____ Trip Return Date: _____ WCGOP Trip #*: _____

Fish Ticket #*: _____ Date Offload Began*: _____

* If available

Haul #	Bocaccio Rockfish		Canary Rockfish		Cowcod		Yelloweye Rockfish		Notes (Discrepancies, issues, etc.)
	Wt	#	Wt	#	Wt	#	Wt	#	
Total									

The observer will keep the WHITE copy. The YELLOW copy will be placed in a sealed envelope and left in the wheelhouse for the catch monitor. Vessels will receive the PINK copy of the form. For more information, including what to do if the vessel and observer disagree on estimates, review the "IFQ Priority Species Tracking Form" outreach material.

Observer's Signature: _____ Date: _____

IFQ Priority Species Form v.2 January 2013 OMB Control No. 0648-0593 expires 11-30-2015

Figure 3-6: IFQ Priority Species Tracking Form

Catch Share Species ID Requirements

There should be a minimum of **five** forms filled out **per trip**. Your species ID forms are evaluated by your debriefer for both accuracy and adherence to the following requirements. Each species only requires one form, assuming it is approved by the debriefer. Please include your species ID forms with your paperwork from the accompanying trip (with the trip number clearly labeled on the form), and send these to your debriefer monthly with the rest of your data.

Forms should be filled out in the following order of priority:

1. IFQ overfished species and Pacific halibut. These species are: Yelloweye, Darblotched, Boccaccio, Cowcod, Canary, Pacific Ocean Perch rockfish, Petrale Sole, and Pacific halibut (not overfished).
   - Completing species ID forms is **mandatory upon first encountering these species**. If you have already filled out five forms in a trip, and encounter an overfished species that you do not have an approved form for, this **MUST** be done immediately. Many of these species are encountered rarely, so, for example, you may never see another Yelloweye again.
   - Please fill out the form thoroughly, labeling identifying characteristics on the diagram of the fish **and take photographs** with the disposable camera issued during training, or with a personal digital camera. Your ID of these fish may come under scrutiny due to the limited quotas, so the photos will be used for corroboration. If you use the disposable camera, it is your responsibility to develop the film before turning in the form. Please have the photos saved to a cd so we have an electronic copy. Your provider will reimburse you this expense.
   - All eight of these species require that a photograph accompany the form.
   - Complete a form for these species regardless of whether they are retained or discarded.
2. IFQ (non-overfished stock status) species. A list of these can be found in your manual.

Tip: If you are only required to take a NIFQ fish to the family level, a form must be filled out for the family (e.g. eelpouts unid). If a more specific form, such as Twoline eelpout is completed, it will take the place of the general family form.

If a species caught is not listed in the species code list in the manual or in the database, contact your debriefer. It will be added to the species list in the database.

UNIDENTIFIED FISH

If there is an individual fish or crab that cannot be identified, fill out a Species Identification Form with as much information as possible. A more identifiable specimen of the same species may come up later, so organize the unidentified fish descriptions with names such as “unidentified black rockfish #1,” or “mystery fish #5” as appropriate. Use these same names on the Species Composition deck form, so that the data can be changed if the fish is identified later. Always take photographs of the specimen for ID purposes and bring the specimen back to NOAA Fisheries.

Remember: Never guess on the ID of a species.

Note: When filling out species ID forms, it is imperative that observers are still holding the fish. Do not fill out the forms using only the fish books after the fish has been discarded. Be sure to complete all required fields, providing clear descriptions, when necessary. It is very important to include any distinguishing characteristics, especially for species that are similar.

Photo Policy

Photos may be used for all ID forms, and with the exception of the seven overfished species and Pacific halibut, a photograph may *replace* your drawing. Remember, for the seven overfished species and Pacific halibut, you should label the diagrams with identifying characteristics *and* take pictures. Please double check that the pictures are well focused and take multiples. Your debriefer will be able to use these to determine if IDs were performed correctly. Additionally, if there are two similar species with small morphological differences, please take photos of those characteristics (e.g. when contrasting Silvergray and Boccaccio RF, please try to photograph the head spines since they differ, and a picture of the anal spines would be helpful as well).

Reciprocity of forms

Due to the increased level of scrutiny your species identification may be subjected to in an Individual Fishing Quota system, it is the policy of the Catch Share program that we accept forms only from the WCGOP Non-Catch Share Program.

- All Non Catch Share Program forms will be accepted, **with the exception** of the eight species listed under section one of the priorities. If you encounter one of these eight species you must complete another form and take photos, even if you have completed a form in the NCS program.
- Species ID forms will **not** be accepted from any other observer program.