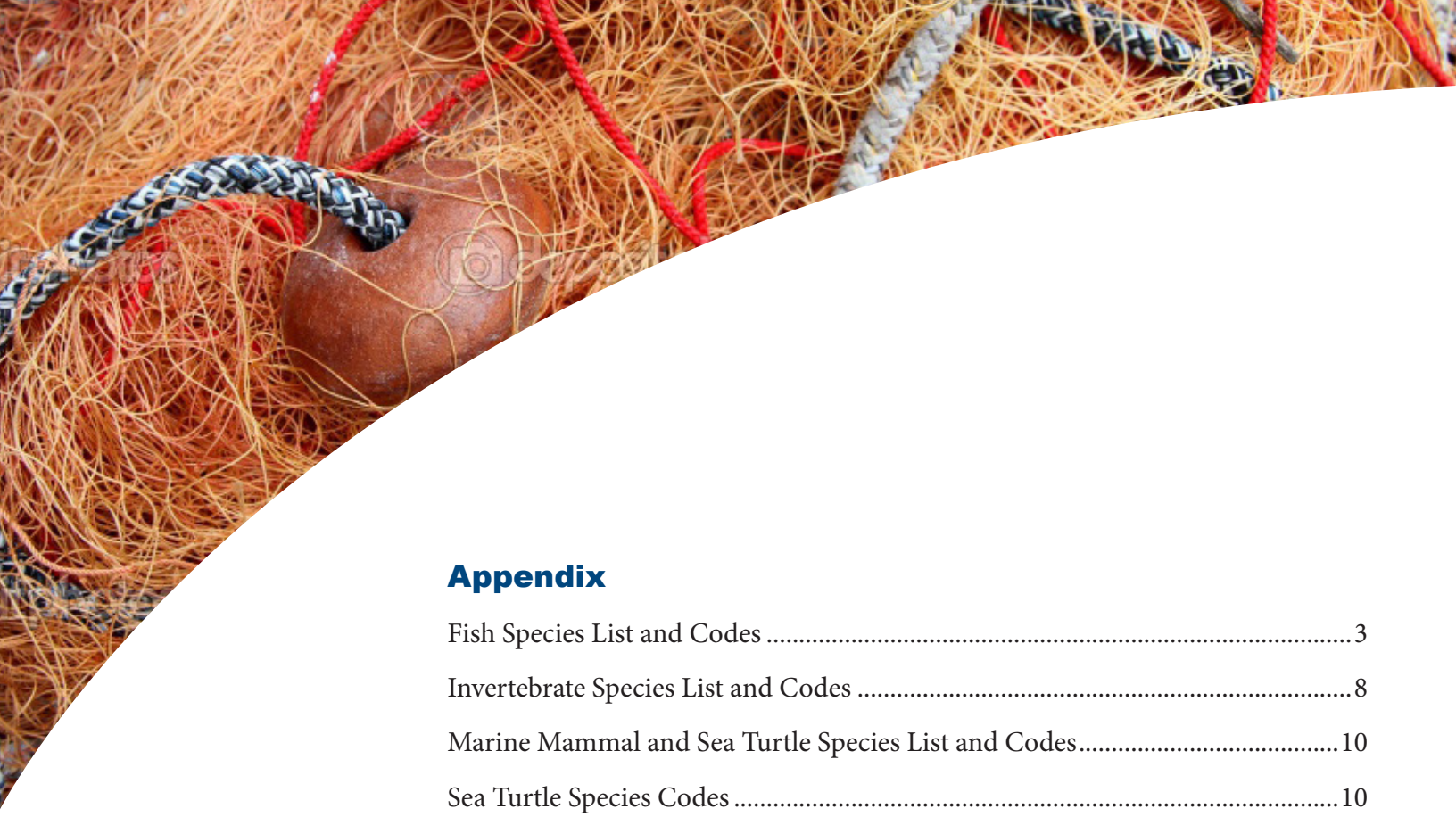

Appendix

Fish Species List and Codes 3

Invertebrate Species List and Codes 8

Marine Mammal and Sea Turtle Species List and Codes 10

Sea Turtle Species Codes 10

Seabird Species List and Codes 11

Miscellaneous List and Codes 11

CS Catch Categories List and Target Strategies 12

Minor Rockfish Species 14
- *Rockfish Categories* *14*

WCGOP Codes 16

WCGOP Mailing Addresses 17

WCGOP Contact Phone Numbers 18

Random Number Table 20
- *How to Use the Random Number Table* *20*

Weights, Measures, and Conversions 22
- *Abbreviations* *22*
- *Weights and Measures* *22*
- *Area, Volume and Product Formulas* *22*
- *Area, Volume and Product Formulas* *23*

Appendix

Pacific Halibut Length/Weight Table 25

Injury Key for Trawl Caught Pacific Halibut 27

Injury Key for Pot Caught Pacific Halibut 29

Injury Key for Hook & Line
Caught Pacific Halibut.....31

50 CFR Part 660.140(h) Observer Program
Regulations.....33

Radio Communications.....49
VHF-FM Radios 49
HF-SSB Radios 50
Radio Procedure.....50

Processors.....53

Loran Information:
LORAN Conversion Program 57
Instructions 57

Latitudinal and Depth Distribution Of Groundfish
Adult Species 59

Paperwork Reduction Act 64
Paperwork Reduction Act Information.....64

Useful Websites.....67
WCGOP Observer-Related Sites 67
Fisheries Management on the West Coast 67
Fisheries Research on the West Coast 67
Fish Identification 67
Fisheries Regulations 67
Marine Safety.....68
Vessel Information 68
Marine Weather.....68
Observer Associations, Interest Groups.....68
Observer Programs Worldwide 68

Vessel Monitoring System (VMS) 69
Parts of the Vessel Monitoring Program.....69
Commonly Asked Questions.....69

IFQ Species by Location Table 71

Glossary 73

Acknowledgements 82

Fish Species List and Codes

Code	Common Name	Scientific Name
1226	Abyssal Grenadier	*Coryphaenoides armatus*
710	Albacore Tuna	*Thunnus alalunga*
1237	Aleutian Skate	*Bathyraja aleutica*
606	American Shad	*Alosa sapidissima*
605	Anchovy Unid	*Engraulididae*
10645	Anglerfish Unid	*Lophiiformes*
141	Arrowtooth Flounder	*Atheresthes stomias*
204	Atka Mackerel	*Pleurogrammus monopterygius*
334	Aurora Rockfish	*Sebastes aurora*
180	Banded Guitarfish	*Zapteryx exasperata*
337	Bank Rockfish	*Sebastes rufus*
770	Barracudina Unid	*Paralepididae*
475	Barred Sand Bass	*Paralabrax nebulifer*
264	Basketweave Cusk-eel	*Ophidion scrippsae*
480	Bass Unid	*Percichthyidae/ Serranidae*
561	Bat Ray	*Myliobatis californica*
185	Bay Pipefish	*Syngnathus l eptorynchus*
252	Bearded Eelpout	*Lyconema barbatum*
453	Beardless spearnose Poacher	*Ganoideus vulsus*
1238	Bering Skate	*Bathyraja interrupta*
550	Big Skate	*Raja binoculata*
454	Bigeye starnose Poacher	*Asterotheca pentacantha*
575	Bigeye Thresher Shark	*Alopias superciliosus*
711	Bigeye Tuna	*Thunnus obesus*
254	Bigfin Eelpout	*Lycodes cortezianus*
119	Bigmouth Sole	*Hippoglossina stomata*
10646	Bigscale Unid	*Melamphaidae*
355	Black and Yellow Rockfish	*Sebastes chrysomelas*
725	Black Croaker	*Cheilotrema saturnum*
255	Black Eelpout	*Lycodes diapterus*
850	Black Hagfish	*Eptatretus deani*
306	Black Rockfish	*Sebastes melanops*
551	Black Skate	*Bathyraja trachura*
630	Black Surfperch	*Embiotoca jacksoni*
256	Blackbelly Eelpout	*Lycodopsis pacifica*
683	Blackchin Unid	*Neoscopelidae*

Code	Common Name	Scientific Name
684	Blackdragon Unid	*Idiacanthidae*
455	Blackedge Poacher	*Xeneretmus latifrons*
456	Blackfin starnose Poacher	*Bathyagonus nigripinnis*
319	Blackgill Rockfish	*Sebastes melanostomus*
257	Blackmouth Eelpout	*Lycodapus fierasfer*
685	Blacksmith	*Chromis punctipinnis*
856	Blob Sculpin	*Psychrolutes phrictus*
316	Blue Rockfish	*Sebastes mystinus*
69	Blue Shark	*Prionace glauca*
1241	Bluebarred Prickleback	*Plectobranchus evides*
712	Bluefin Tuna	*Thunnus thynnus*
457	Bluespotted Poacher	*Xeneretmus triacanthus*
302	Bocaccio Rockfish	*Sebastes paucispinus*
1219	Bonito (Shortfin Mako) Shark	*Isurus oxyrinchus*
687	Bristlemouth Unid	*Gonostomatidae*
356	Bronzespotted Rockfish	*Sebastes gilli*
68	Brown Cat Shark	*Apristurus brunneus*
408	Brown Irish Lord Sculpin	*Hemilepidotus spinosus*
332	Brown Rockfish	*Sebastes auriculatus*
576	Brown Smoothhound Shark	*Mustelus henlei*
409	Buffalo Sculpin	*Enophrys bison*
410	Bull Sculpin	*Enophrys taurina*
198	Bullet Mackerel	*Auxis rochei*
109	Butter Sole	*Pleuronectes isolepis*
1234	Butterfly Ray	*Gymnura marmorata*
689	Cabezon	*Scorpaenichthys marmoratus*
357	Calico Rockfish	*Sebastes dalli*
631	Calico Surfperch	*Amphistichus koelzi*
682	California Barracuda	*Sphyraena argentea*
692	California Corbina	*Menticirrhus undulatus*
1225	California Grenadier	*Nezumia stelgidolepis*
124	California Halibut	*Paralichthys californicus*
151	California Lizardfish	*Synodus lucioceps*
1212	California Moray	*Gymnothorax mordax*
423	California Scorpionfish	*Scorpaena guttata*
794	California Sheephead	*Semicossyphus pulcher*
552	California Skate	*Raja inornata*

Code	Common Name	Scientific Name
160	California Slickhead	*Alepocephalus tenebrosus*
113	California Tonguefish	*Symphurus atricauda*
314	Canary Rockfish	*Sebastes pinniger*
604	Capelin	*Mallotus villosus*
870	Cat Unid Shark	*Scyliorhinidae*
358	Chameleon Rockfish	*Sebastes phillipsi*
325	Chilipepper Rockfish	*Sebastes goodei*
359	China Rockfish	*Sebastes nebulosus*
118	C-O (C-O Turbot) Sole	*Pleuronichthys coenosus*
1247	Cod Unid	*Gadidae*
1210	Combfish Unid	*Zaniolepididae*
577	Common Thresher Shark	*Alopias vulpinus*
327	Copper Rockfish	*Sebastes caurinus*
360	Cowcod Rockfish	*Sebastes levis*
1221	Crested Bigscale	*Poromitra crassiceps*
727	Croaker Unid	*Sciaenidae*
117	Curlfin Turbot	*Pleuronichthys decurrens*
262	Cusk-eel Unid	*Ophidiidae*
227	Cutthroat Trout	*Oncorhynchus clarkii*
679	Daggertooth	*Anotopterus pharao*
311	Darkblotched Rockfish	*Sebastes crameri*
899	Decomposed Fish	*Decomposed fish*
609	Deepbody Anchovy	*Anchoa compressa*
553	Deepsea Skate	*Bathyraja abyssicola*
693	Deepsea smelt Unid	*Bathylagidae*
110	Deepsea Sole	*Embassichthys bathybius*
559	Diamond Stingray	*Dasyatis dipterura*
121	Diamond Turbot	*Hypsopsetta guttulata*
221	Dog (Chum) Salmon	*Oncorhynchus keta*
578	Dogfish Shark Unid	*Squalus sp.*
228	Dolly Varden	*Salvelinus malma*
694	Dolphinfish	*Coryphaena hippurus*
107	Dover Sole	*Microstomus pacificus*
1101	Dragonfish, Unid	*Melanostomiidae*
1266	Dreamers, Unid	*Oneirodidae*
1273	Duckbill Eel	*Nettastomatidae*
1216	Dusky Sculpin	*Icelinus burchami*
783	Dwarf Wrymouth	*Cryptacanthodes aleutensis*
361	Dwarf-red Rockfish	*Sebastes rufianus*

Code	Common Name	Scientific Name
250	Eelpout Unid	*Zoarcidae gnn.*
108	English Sole	*Pleuronectes vetulus*
601	Eulachon	*Thaleichthys pacificus*
855	Fangtooth	*Anoplogaster cornuta*
120	Fantail Sole	*Xystreurys liolepis*
1229	Filamented Grenadier	*Coryphaenoides filifer*
579	Filetail Cat Shark	*Parmaturus xaniurus*
854	Finescale Triggerfish	*Balistes polylepis*
1239	Fine-spined Skate	*Bathyraja microtrachys*
362	Flag Rockfish	*Sebastes rubrivinctus*
258	Flatcheek Eelpout	*Embryx crotalina*
100	Flatfish Unid	*Pleuronectiformes*
1236	Flathead Skate	*Bathyraja rosispinis*
103	Flathead Sole	*Hippoglossoides elassodon*
858	Flying Fish Unid	*Exocoetidae*
363	Freckled Rockfish	*Sebastes lentiginosus*
197	Frigate Mackerel	*Auxis thazard*
411	Fringed Sculpin	*Icelinus fimbriatus*
853	Garibaldi	*Hypsypops rubicundus*
1227	Ghostly Grenadier	*Coryphaenoides leptolepis*
82	Giant Grenadier	*Albatrossia pectoralis*
740	Giant Kelpfish	*Heterostichus rostratus*
476	Giant Sea Bass	*Stereolepis gigas*
760	Giant Wrymouth	*Cryptacanthodes giganteus*
364	Gopher Rockfish	*Sebastes carnatus*
1202	Gorgonian Coral unid.	*Gorgonian*
365	Grass Rockfish	*Sebastes rastrelliger*
580	Gray Smoothhound Shark	*Mustelus californicus*
231	Green Sturgeon	*Acipenser medirostris*
366	Greenblotched Rockfish	*Sebastes rosenblatti*
102	Greenland Turbot	*Reinhardtius hippoglossoides*
390	Greenling Unid	*Hexagrammidae*
339	Greenspotted Rockfish	*Sebastes chlorostictus*
313	Greenstriped Rockfish	*Sebastes elongates*
80	Grenadier Unid	*Macrouridae*
412	Grunt Sculpin	*Rhamphocottus richardsoni*
430	Gunnel Unid	*Pholidae*
695	Hachetfish Unid	*Sternoptychidae*

Code	Common Name	Scientific Name
77	Hagfish Unid	*Myxinidae*
367	Halfbanded Rockfish	*Sebastes semicinctus*
697	Halfmoon	*Medialuna californiensis*
323	Harlequin Rockfish	*Sebastes variegatus*
368	Honeycomb Rockfish	*Sebastes umbrosus*
1265	Herring, unid	*Clupeidae*
581	Horn Shark	*Heterodontus francisci*
122	Hornyhead Turbot	*Pleuronichthys verticalis*
155	Hundred fathom Mora	*Physiculus rastrelliger*
116	Hybrid Sole	*Inopsetta ischyra*
175	Jack Smelt	*Atherinops californiensis*
207	Jackmackerel	*Trachurus symmetricus*
477	Kelp Bass	*Paralabrax clathratus*
392	Kelp Greenling	*Hexagrammos decagrammus*
369	Kelp Rockfish	*Sebastes atrovirens*
632	Kelp Surfperch	*Brachyistius frenatus*
742	Kelpfish Unid	*Clinidae*
222	King (Chinook) Salmon	*Oncorhynchus tshawytscha*
608	King of the Salmon	*Trachipterus altivelis*
699	Lancetfish Unid	*Alepisauridae*
700	Laternfish Unid	*Myctophidae*
867	Lavender Sculpin	*Leiocottus hirundo*
1251	Leaf Like Eel	*Thalassenchelys cohen*
582	Leopard Shark	*Triakis semifasciata*
150	Lightfish Unid	*Photichthyidae*
603	Lingcod	*Ophiodon elongatus*
10647	Longfin Dragonfish	*Tactostoma macropus*
1249	Longfin Mako Shark	*Isurus paucus*
125	Longfin Sanddab	*Citharichthys xanthostigma*
1253	Longfin Smelt	*Spirinchus thaleichthys*
852	Longnose Cat Shark	*Apristurus kampae*
785	Longnose Lancetfish	*Alepisaurus ferox*
554	Longnose Skate	*Raja rhina*
690	Longspine Combfish	*Zaniolepis latipinnis*
352	Longspine Thornyhead	*Sebastolobus altivelis*
152	Loosejaw Unid	*Malacosteidae*
153	Louvar	*Luvarus imperialis*

Code	Common Name	Scientific Name
525	Lumpsucker Unid	*Cyclopteridae*
792	Lumptail Searobin	*Prionotus stephanophrys*
196	Mackerel Unid	*Scombridae*
774	Manefish	*Caristius macropus*
1231	Manta Ray	*Mata birostris*
154	Medusafish	*Icichthys lockingtoni*
370	Mexican Rockfish	*Sebastes macdonaldi*
869	Midshipman (Toadfish) Unid	*Batrachoididae*
259	Midwater Eelpout	*Melanostigma pammelas*
810	Mola Mola (Sunfish)	*Mola mola*
272	Monkeyface Prickleback	*Cebidichthys violaceus*
1262	Moridae Unid	*Moridae*
176	Night Smelt	*Spirinchus starksi*
1263	Non-Eulachon Smelt Unid	Eulachon
610	Northern Anchovy	*Engraulis mordax*
303	Northern Rockfish	*Sebastes polyspinis*
241	Northern Ronquil	*Ronquilis jordani*
458	Northern spearnose Poacher	*Agonopsis vulsa*
798	Ocean Whitefish	*Caulolatilus princeps*
371	Olive Rockfish	*Sebastes serranoides*
435	Onespot Fringehead	*Neoclinus uninotatus*
297	Opah	*Lampris gattatus (regious)*
157	Opaleye	*Girella nigricans*
777	Other Id Fish	*Fish other id*
295	Oxeye Oreo	*Allocyttus folletti*
583	Pacific Angel Shark	*Squatina californica*
681	Pacific Argentine	*Argentina sialis*
1250	Pacific Black Dogfish	*Centroscyllium nigrum*
686	Pacific Bonito	*Sarda chiliensis*
688	Pacific Butterfish	*Peprilus simillimus*
202	Pacific Cod	*Gadus macrocephalus*
584	Pacific Dogfish Shark	*Squalus suckleyi*
562	Pacific Electric Ray	*Torpedo californica*
214	Pacific Flatnose	*Antimora microlepis*
83	Pacific Grenadier	*Coryphaenoides acrolepis*
79	Pacific Hagfish	*Eptatretus stouti*
206	Pacific Hake	*Merluccius productus*

Code	Common Name	Scientific Name
101	Pacific Halibut	*Hippoglossus stenolepis*
611	Pacific Herring	*Clupea pallasii*
75	Pacific Lamprey	*Lampetra tridentata*
199	Pacific Mackerel	*Scomber japonicus*
301	Pacific Ocean Perch Rockfish	*Sebastes alutus*
158	Pacific Pomfret	*Brama japonica*
137	Pacific Sanddab	*Citharichthys sordidus*
239	Pacific Sandfish	*Trichodon trichodon*
670	Pacific Sandlance	*Ammodytes hexapterus*
614	Pacific Sardine	*Sardinops sagax*
607	Pacific Saury	*Cololabis saira*
1218	Pacific Scabbardfish	*Lepidopus xantusi*
62	Pacific Sleeper Shark	*Somniosus pacificus*
1261	Pacific Snake Eel	*Ophicthus triserialis*
530	Pacific Spiny Lumpsucker	*Eumicrotremus orbis*
413	Pacific Staghorn Sculpin	*Leptocottus armatus*
209	Pacific Tom Cod	*Microgadus proximus*
797	Pacific Viperfish	*Chauliodus macouni*
394	Painted Greenling	*Oxylebius pictus*
260	Pallid Eelpout	*Lycodapus mandibularis*
762	Paperbone Unid	*Notosudidae*
862	Pelagic Stingray	*Dasyatis violacea*
585	Pelagic Thresher Shark	*Alopias pelagicus*
112	Petrale Sole	*Eopsetta jordani*
633	Pile Surfperch	*Rhacochilus vacca*
225	Pink (Humpback) Salmon	*Oncorhynchus gorbuscha*
372	Pink Rockfish	*Sebastes eos*
634	Pink Surfperch	*Zalembius rosaceus*
373	Pinkrose Rockfish	*Sebastes simulator*
664	Plainfin Midshipman	*Porichthys notatus*
450	Poacher Unid	*Agonidae*
84	Popeye Grenadier	*Coryphaenoides cinereus*
750	Prickleback Unid	*Stichaeidae*
459	Pricklebreast Poacher	*Stellerina xyosterna*
586	Prickly Shark	*Echinorhinus cookei*
205	Prowfish	*Zaprora silenus*
374	Puget Sound Rockfish	*Sebastes emphaeus*
1242	Purple Brotula	*Oligopus diagrammus*
460	Pygmy Poacher	*Odontopyxis trispinosa*

Code	Common Name	Scientific Name
335	Pygmy Rockfish	*Sebastes wilsoni*
159	Queenfish	*Seriphus politus*
343	Quillback Rockfish	*Sebastes maliger*
280	Ragfish	*Icosteus aenigmaticus*
1252	Rainbow Smelt	*Osmerus mordax*
635	Rainbow Surfperch	*Hypsurus caryi*
563	Ray Unid	*Myliobatoidea*
224	Red (Sockeye) Salmon	*Oncorhynchus nerka*
1215	Red Brotula	*Brosmophycis marginata*
407	Red Irish Lord Sculpin	*Hemilepidotus hemilepidotus*
308	Redbanded Rockfish	*Sebastes babcocki*
324	Redstripe Rockfish	*Sebastes proriger*
636	Redtail Surfperch	*Amphistichus rhodoterus*
105	Rex Sole	*Errex zachirus*
564	Ribbonfish Unid	*Trachipteridae*
393	Rock Greenling	*Hexagrammos lagocephalus*
104	Rock Sole	*Pleuronectes bilineatus*
1213	Rock Wrasse	*Halichoeres semicinctus*
300	Rockfish Unid	*Sebastes*
461	Rockhead Poacher	*Bothragonus swani*
240	Ronquil Unid	*Bathymasteridae*
309	Rosethorn Rockfish	*Sebastes helvomaculatus*
312	Rosy Rockfish	*Sebastes rosaceus*
414	Roughback Sculpin	*Chitonotus pugetensis*
307	Rougheye Rockfish	*Sebastes aleutianus*
114	Roughscale Sole	*Clidoderma asperrimum*
1235	Roughshoulder/Broad Skate	*Amblyraja badia*
612	Round Herring	*Etrumeus teres*
560	Round Stingray	*Urolophus halleri*
200	Roundfish Unid	*Roundfish unid.*
637	Rubberlip Surfperch	*Rhacochilus toxotes*
203	Sablefish	*Anoplopoma fimbria*
1243	Salmon Shark	*Lamna ditropis*
220	Salmon Unid	*Oncorhynchus*
115	Sand Sole	*Psettichthys melanostictus*
136	Sanddab Unid	*Citharichthys*

Code	Common Name	Scientific Name
555	Sandpaper Skate	*Bathyraja kincaidii*
436	Sarcastic Fringehead	*Neoclinus blanchardi*
1217	Sargo	*Anisotremus davidsonii*
1268	Scabbardfishes/Cutlass-fishes, Unid	*Trichiuridae*
790	Scaleless Dragonfish Unid	*Melanostomiidae*
791	Scaly Dragonfish Unid	*Stomiidae*
400	Sculpin Unid	*Cottidae*
1270	Seadevils	*Ceratiidae*
375	Semaphore Rockfish	*Sebastes melanosema*
793	Senorita Senorita	*Oxyjulis californica*
1220	Sevengill Shark	*Notorynchus cepedianus*
65	Shark Unid	*Squaliformes*
304	Sharpchin Rockfish	*Sebastes zacentrus*
415	Sharpnose Sculpin	*Clinocottus acuticeps*
638	Shiner Surfperch	*Cymatogaster aggregata*
318	Shortbelly Rockfish	*Sebastes jordani*
326	Shortraker Rockfish	*Sebastes borealis*
354	Shortraker/Rougheye Rockfish	*Sebastes Shortraker/ Rougheye*
691	Shortspine Combfish	*Zaniolepis frenata*
350	Shortspine Thornyhead	*Sebastolobus alascanus*
349	Shortspine/ Longspine Thornyhead	*Sebastolobus*
1222	Shoulderspot Grenadier	*Coelorinchus scaphopsis*
181	Shovelnose Guitarfish	*Rhinobatos productus*
223	Silver (Coho) Salmon	*Oncorhynchus kisutch*
639	Silver Surfperch	*Hyperprosopon ellipticum*
310	Silvergray Rockfish	*Sebastes brevispinus*
416	Silverspotted Sculpin	*Blepsias cirrhosus*
78	Sixgill Shark	*Hexanchus griseus*
90	Skate Unid	*Rajidae*
1274	Skillfish	*Erilepis zonifer*
713	Skipjack Tuna	*Euthynnus lineatus*
860	Slender Codling	*Halargyreus johnsonii*
111	Slender Sole	*Lyopsetta exilis*
162	Slickhead Unid	*Alepocephalidae*
417	Slim Sculpin	*Radulinus asprellus*
270	Smalleye Squaretail	*Tetragonurus cuvieri*
602	Smelt Unid	*Osmeridae*
1224	Smooth Grenadier	*Nezumia liolepis*

Code	Common Name	Scientific Name
857	Smooth Stargazer	*Kathetostoma averruncus*
462	Smootheye Poacher	*Xeneretmus leiops*
1246	Smoothhound Shark Unid	*Mustelus Sp.*
1233	Smoothtail Mobula	*Mobula lucasana*
795	Snaggletooth Unid	*Astronesthidae*
500	Snailfish Unid	*Liparis*
868	Snakehead Eelpout	*Embryx crotalinus*
1214	Snipe Unid Eel	*Nemichthyidae*
186	Snubnose Pipefish	*Cosmocampus arctus*
263	Soft Eelpout	*Bothrocara molle*
1223	Softhead Grenadier	*Malacocephalus laevis*
64	Soupfin Shark	*Galeorhinus galeus*
463	Southern Spearnose Poacher	*Agonopsis sterletus*
376	Speckled Rockfish	*Sebastes ovalis*
126	Speckled Sanddab	*Citharichthys stigmaeus*
665	Specklefin Midshipman	*Porichthys myriaster*
1232	Spinetail Mobula	*Mobula japanica*
66	Spiny Dogfish Shark	*Squalus acanthias*
464	Spinycheek Starnose Poacher	*Asterotheca infraspinata*
418	Spinyhead Sculpin	*Dasycottus setiger*
315	Splitnose Rockfish	*Sebastes diploproa*
796	Barreleyes/ Spookfish Unid	*Opisthoproctidae*
726	Spotfin Croaker	*Roncador stearnsi*
419	Spotfin Sculpin	*Icelinus tenuis*
640	Spotfin Surfperch	*Hyperprosopon anale*
261	Spotted Cusk-eel	*Chilara taylori*
99	Spotted Ratfish	*Hydrolagus colliei*
1245	Spotted Rockfish Unid	*Sebastomus*
478	Spotted Sand Bass	*Paralabrax maculatofasciatus*
123	Spotted Turbot	*Pleuronichthys ritteri*
377	Squarespot Rockfish	*Sebastes hopkinsi*
142	Starry Flounder	*Platichthys stellatus*
378	Starry Rockfish	*Sebastes constellatus*
556	Starry Skate	*Raja stellulata*
226	Steelhead (Rainbow Trout)	*Oncorhynchus mykiss*
479	Striped Bass	*Morone saxatilis*
741	Striped Kelpfish	*Gibbonsia metzi*
156	Striped Mullet	*Mugil cephalus*

Code	Common Name	Scientific Name
641	Striped Surfperch	*Embiotoca lateralis*
242	Stripefin Ronquil	*Rathbunella hypoplecta*
328	Stripetail Rockfish	*Sebastes saxicola*
452	Sturgeon Poacher	*Podothecus acipenserinus*
230	Sturgeon Unid	*Acipenser*
177	Surf Smelt	*Hypomesus pretiosus*
642	Surfperch Unid	*Embiotocidae*
587	Swell Shark	*Cephaloscyllium ventriosum*
379	Swordspine Rockfish	*Sebastes ensifer*
420	Thornback Sculpin	*Paricelinus hopliticus*
557	Thornback Skate	*Platyrhiniodis triseriata*
421	Threadfin Sculpin	*Icelinus filamentosus*
161	Threadfin Slickhead	*Talismania bifurcata*
329	Tiger Rockfish	*Sebastes nigrocinctus*
178	Top Smelt	*Atherinops affinis*
380	Treefish Rockfish	*Sebastes serriceps*
465	Tubenose Poacher	*Pallasina barbata*
807	Tubeshoulder Unid	*Searsiidae*
253	Twoline Eelpout	*Bothrocara brunneum*
331	Vermilion Rockfish	*Sebastes miniatus*
805	Viperfish Unid	*Chauliodontidae*
201	Walleye Pollock	*Theragra chalcogramma*
643	Walleye Surfperch	*Hyperprosopon argenteum*
466	Warty Poacher	*Occella verrucosa*
251	Wattled Eelpout	*Lycodes palearis*
1248	Whiptail Gulper Unid	*Saccopharyngidae*
728	White Croaker	*Genyonemus lineatus*
481	White Sea Bass	*Atractoscion nobilis*
558	White Skate	*Bathyraja spinosissima*
232	White Sturgeon	*Acipenser transmon-tanus*
644	White Surfperch	*Phanerodon furcatus*
613	Whitebait Smelt	*Allosmesus elongatus*
273	Whitebarred Prickleback	*Poroclinus rothrocki*
391	Whitespotted Greenling	*Hexagrammos stelleri*
305	Widow Rockfish	*Sebastes entomelas*
780	Wolf-eel	*Anarrhichthys ocellatus*
799	Wrymouth Unid	*Cryptacanthodidae*

Code	Common Name	Scientific Name
1228	Yaquina Grenadier	*Coryphaenoides yaquinae*
422	Yellowchin Sculpin	*Icelinus quadriseriatus*
322	Yelloweye Rockfish	*Sebastes ruberrimus*
729	Yellowfin Croaker	*Umbrina roncador*
714	Yellowfin Tuna	*Thunnus albacares*
320	Yellowmouth Rockfish	*Sebastes reedi*
698	Yellowtail Jack	*Seriola dorsalis*
321	Yellowtail Rockfish	*Sebastes flavidus*

Invertebrate Species List and Codes

Code	Common Name	Scientific Name
1206	Amiphpod Unid	*Amphipoda*
55	Anemone Unid	*Actiniaria*
19	Angulatus Tanner Crab	*Chionoecetes angulatus*
1207	Aplacophora Unid	*Aplachophora*
888	Arched Swimming Crab	*Callinectes arcuatus*
5	Armored Box Crab	*Mursia gaudichaudi*
4	Bairdi Tanner Crab	*Chionoecetes bairdi*
1260	Bamboo Coral	*Calaxonia*
48	Barnacles Unid	*Cirripedia*
27	Bivalves Unid	*Bivalvia*
1201	Black Coral	*Antipatharia*
1271	Blind Lobster	*Polychelidae*
866	Brachiopod Unid	*Brachiopoda*
22	Brittle/Basket Star Unid	*Ophiuroidea*
6	Brown Box Crab	*Lopholithodes foraminatus*
7	California King Crab	*Paralithodes californiensis*
10	Cancer Unid Crab	*Cancridae*
28	Chiton Unid	*Neoloricata*
32	Corals Unid	*Anthozoa*
1	Crab Unid	*Brachyura/Anomura*
53	Crinoids Unid	*Crinoidea*
892	Crustacean Unid	*Crustacea*
39	Decorator/Spider Unid Crab	*Majidae*
871	Deep-sea Rock Crab	*Glyptolithodes c ristatipes*
872	Deep-sea Spider Crab	*Paralomis manningi*

Code	Common Name	Scientific Name
12	Dungeness Crab	*Cancer magister*
38	Flat-legged Spider Crab	*Paralomis verrilli*
873	Furrowed Rock Crab	*Cancer branneri*
1202	Gorgonian Coral unid.	*Gorgonian*
44	Graceful Crab	*Cancer gracilis*
874	Green Crab	*Carcinus maenus*
17	Hair Crab	*Paralomis multispina*
875	Heart Crab	*Phyllolithodes papillosus*
15	Hermit Unid Crab	*Paguridae*
1258	Horny Gorgonian Coral	*Holaxonia*
620	Humboldt (Jumbo) Squid	*Dosidicus gigas*
1205	Hydrocoral	*Hydroida*
13	Invertebrate Unid	*Animalia*
1240	Irregular Echinoids	*Echinoidea*
33	Isopod Unid	*Isopoda*
35	Jellyfish Unid	*Scyphozoa*
876	Kelp Unid Crab	*Pugettia ssp*
2	King Unid Crab	*Lithode*
877	Long-armed Spider Crab	*Macroregonia macrochiera*
840	Lyre Unid Crab	*Hyas spp.*
1272	Mantis Shrimp	
878	Masking Crab	*Loxorhynchus crispatus*
34	Mollusk Unid	*Mollusca*
1264	Non Humboldt Squid, Unid	*Teuthida*
25	Nudibranch Unid	*Nudibranchia*
60	Octopus Unid	*Octopoda*
879	Pacific Rock Crab	*Cancer antennarius*
1208	Peanut Worm Unid	*Sipuncula*
880	Porcelain Unid Crab	*Porcellanidae*
881	Puget Sound King Crab	*Lopholithodes mandtii*
882	Purple Globe Crab	*Randallia ornata*
9	Red Rock Crab	*Cancer productus*
883	Rhinoceros Crab	*Rhinolithodes wosnessenskii*
1276	Sail Jellyfish	*Velella velella*
1275	Salp Unid	*Tunicata (Subphylum)*
16	Scarlet King Crab	*Lithodes couesi*
41	Sea Cucumber Unid	*Holothuroidea*

Code	Common Name	Scientific Name
1259	Sea Fans	*Calaxonia*
1256	Sea Pen	*Pennatulacea*
1255	Sea Pansies	*Pennatulacea*
30	Sea Snail Unid	*Gastropoda*
889	Sea Spider Unid	*Pycnogonida*
47	Sea Squirt Unid	*Tunicata*
20	Sea Star Unid	*Asteroidea*
1254	Sea Whip	*Pennatulacea*
884	Sheep Crab	*Loxorhynchus grandis*
70	Shrimp Unid	*Caridea*
1267	Skeleton shrimp, unid	*Caprellidae*
1203	Soft Coral	*Alcyonacea*
885	Spiky King Crab	*Neolithodes diomedeae*
8	Spiny King Crab	*Paralithodes rathbuni*
1230	Spiny Lithode Crab	*Acantholithodes hispidus*
891	Spiny Lobster Unid	*Palinura*
26	Sponge Unid	*Porifera*
1257	Spongy Gorgonian Coral	*Scleraxonia*
890	Squat Lobster Unid	*Galatheidae*
50	Squid Unid	*Teuthoidea*
1204	Stony Coral	*Scleractinia*
3	Tanner Unid Crab	*Chionoecetes spp.*
18	Tanneri Tanner Crab	*Chionoecetes tanneri*
49	Tunicata	*Tunicata (subphy-lum)*
886	Umbrella Unid Crab	*Cryptolithodes ssp*
54	Urchin Unid	*Echinoidea*
1209	Worm Unid	*Annelida*
887	Xantus Swimming Crab	*Portunus xantusii*
11	Yellow Rock Crab	*Cancer anthonyi*

Marine Mammal and Sea Turtle Species List and Codes

Code	Common Name	Scientific Name
1001	Bairds Beaked Whale	*Berardius bairdii*
1008	Beaked Whale Unid	*Ziphiidae*
1002	Blainevilles Beaked Whale	*Mesoplodon densirostris*
1031	Blue Whale	*Balaenoptera musculus*
1009	Bottlenose Dolphin	*Tursiops truncatus*
1024	California Sea Lion	*Zalophus californianus*
1044	Common Unid Dolphin	*Delphinus*
1003	Cuviers Beaked Whale	*Ziphius cavirostris*
1021	Dalls Porpoise	*Phocoenoides dalli*
1016	Dolphin Unid	*Delphinidae*
1032	Dwarf Sperm Whale	*Kogia breviceps*
1033	Fin Whale	*Balaenoptera physalus*
1019	Fur Seal Unid	*Arctocephalinae*
1004	Gingko-toothed Beaked Whale	*Mesoplodon ginkgodens*
1034	Gray Whale	*Eschrichtius robustus*
1017	Guadalupe Fur Seal	*Arctocephalus townsendi*
1022	Harbor Porpoise	*Phocoena phocoena*
1028	Harbor Seal	*Phoca vitulina*
1005	Hectors Beaked Whale	*Mesoplodon hectori*
1006	Hubbs Beaked Whale	*Mesoplodon c arlhubbsi*
1035	Humpback Whale	*Megaptera novaeangliae*
1036	Killer Whale	*Orcinus orca*
1010	Long-beaked Common Dolphin	*Delphinus capensis*
1000	Marine mammal Unid	*Marine mammal, Unid*
1037	Minke Whale	*Balaenoptera acutorostrata*
1029	Northern Elephant Seal	*Mirounga angustirostris*
1018	Northern Fur Seal	*Callorhinus ursinus*
1038	Northern Right Whale	*Eubalaena glacialis*
1011	Northern Right Whale Dolphin	*Lissodelphis borealis*
1012	Pacific White-sided Dolphin	*Lagenorhynchus obliquidens*
1020	Pinniped Unid	*Caniformia*
1023	Porpoise Unid	*Phocoenidae*
1039	Pygmy Sperm Whale	*Kogia breviceps*
1013	Rissos Dolphin	*Grampus griseus*
1026	Sea Lion Unid	*Otariindae*
1027	Sea Otter	*Enhydra lutris*
1030	Seal Unid	*Phocidae*
1040	Sei Whale	*Balaenoptera borealis*
1014	Short-beaked Common Dolphin	*Delphinus delphis*
1041	Short-finned Pilot Whale	*Globicephala macrorhynchus*
1042	Sperm Whale	*Physeter catodon*
1007	Stejnegers Beaked Whale	*Mesoplodon stejnegeri*
1025	Stellar Sea Lion	*Eumetopias jubatus*
1015	Striped Dolphin	*Stenella coeruleoalba*
1043	Whale Unid	*Whale unid.*

Sea Turtle Species Codes

Code	Common Name	Scientific Name
1071	Green/Black Turtle	*Chelonia mydas/ agassizi*
1072	Hawksbill Turtle	*Eretmochelys imbricata*
1073	Leatherback Turtle	*Dermochelys coriacea*
1074	Loggerhead Turtle	*Caretta caretta*
1075	Olive Ridley Turtle	*Lepidochelys olivacea*
1070	Turtle Unid	*Chelonidae*

Seabird Species List and Codes

Code	Common Name	Scientific Name
949	Albatross Unid	*Diomedeidae*
983	Alcid Unid	*Alcidae*
912	American Coot	*Fulica americana*
993	Ancient Murrelet	*Synthliboramphus antiquus*
900	Bird Unid	*Aves*
959	Black Storm-Petrel	*Oceanodroma melania*
952	Black-footed Albatross	*Diomedea nigripes*
976	Black-legged Kittiwake	*Rissa tridactyla*
953	Black-vented Shearwater	*Puffinus opisthomelas*
962	Brandts Cormorant	*Phalacrocorax penicillatus*
998	Brown Booby	*Sula leucogaster*
910	Brown Pelican	*Pelecanus occidentalis*
975	California Gull	*Larus californicus*
911	Caspian Tern	*Sterna caspia*
996	Cassins Auklet	*Ptychoramphus aleuticus*
989	Common (Guillemot) Murre	*Uria aalge*
941	Common Loon	*Gavia immer*
961	Cormorant Unid	*Phalacrocoracidae*
963	Double-crested Cormorant	*Phalacrocorax auritus*
960	Fork-tailed Storm-Petrel	*Oceanodroma furcata*
979	Glaucous-winged Gull	*Larus glaucescens*
946	Grebe Unid	*Podicipedidae*
948	Guillemot Unid	*Cepphus*
974	Gull Unid	*Larinae*
978	Heermanns Gull	*Larus heermanni*
977	Herring Gull	*Larus argentatus*
945	Horned Grebe	*Podiceps auritus*
951	Laysan Albatross	*Diomedea immutabilis*
965	Leachs Storm-Petrel	*Oceanodroma leucorhoa*
966	Least Storm-Petrel	*Oceanodroma microsoma*
944	Loon Unid	*Gaviidae*
994	Marbled Murrelet	*Brachyramphus marmoratus*
980	Mew Gull	*Larus canus*
987	Murre Unid	*Uria*
954	Northern Fulmar	*Fulmarus glacialis*
940	Pacific Loon	*Gavia pacifica*
964	Pelagic Cormorant	*Phalacrocorax pelagicus*
947	Pigeon Guillemot	*Cepphus columba*
955	Pink-footed Shearwater	*Puffinus creatopus*
942	Red-necked Grebe	*Podiceps grisegena*
939	Red-throated Loon	*Gavia stellata*
995	Rhinoceros Auklet	*Cerorhinca monocerata*
981	Ring-billed Gull	*Larus delawarensis*
997	Shearwater Unid	*Puffinus*
950	Short-tailed Albatross	*Diomedea albatrus*
957	Short-tailed Shearwater	*Puffinus tenuirostris*
956	Sooty Shearwater	*Puffinus griseus*
958	Storm-Petrel Unid	*Hydrobatidae*
992	Tufted Puffin	*Fratercula cirrhata*
943	Western Grebe	*Aechmophorus occidentalis*
982	Western Gull	*Larus occidentalis*

Miscellaneous List and Codes

Code	Common Name	Scientific Name
91	Egg case Unid	*Egg case unid*
667	Garbage/ Trash	*Cans, bottles, old line, etc.*
666	Kelp, Rocks, Wood, etc Mud	*Mud*

CS Catch Categories List and Target Strategies

Below are tables of catch category codes; 1) All Other Catch Category Codes, 2)Marine Mammal Catch Category Codes 3) Seabird Catch Category Codes, 4) Species Specific Catch Category Codes, 5) Species Grouping Catch Category Codes . All catch categories may be used as a target strategy. Do not use target strategies as catch categories. Use Species Specific Catch Categories when ever possible.

Other Catch Category Codes		Unsampled Haul Codes		Target Strategies	
Code	**Species Name**	**Code**	**Species Name**	**Code**	**Species Name**
INVT	Invertebrates	IFQM	Mixed IFQ species	BRSH	Bottom rockfish shelf - target
ZMIS	Miscellaneous	NIFQ	Non-IFQ species	BRSL	Bottom rockfish slope - target
MBOT	Miscellaneous bottom items	UNST	Discarded unsorted catch	DTS	Dover/thornyheads/sable-fish - target
				DWD	Deepwater dover - target
				MSCZ	Miscellaneous - target
				NSM	Nearshore mix - target
				UNKN	Unknown - target

Marine Mammal Catch Categories Codes					
Code	**Species Name**	**Code**	**Species Name**	**Code**	**Species Name**
BDOL	Bottlenose Dolphin	HSEL	Harbor Seal	PRPS	Porpoise Unid
CASL	California Sea Lion	ZMRM	Marine mammal Unid	RISO	Rissos Dolphin
CETN	Cetacean Unid.	NOES	Northern Elephant Seal	SELN	Sea Lion Unid
DPRP	Dalls Porpoise	NOFS	Northern Fur Seal	SOTT	Sea Otter
DLPH	Dolphin Unid	NORW	Northern Right Whale Dolphin	SEAL	Seal Unid
GDFS	Guadalupe Fur Seal	PWSD	Pacific White-sided Dolphin	STSL	Steller Sea Lion
HPRP	Harbor Porpoise	PNPD	Pinniped Unid		

Sea Bird Catch Categories Codes					
Code	**Species Name**	**Code**	**Species Name**	**Code**	**Species Name**
ALBA	Albatross Unid	LSAL	Laysan Albatross	XBRD	Seabird Unid
BFAL	Black-footed Albatross	FULM	Northern Fulmar	SWTR	Shearwater Unid
GULL	Gull Unid	XPET	Petral Unid	STAL	Short-tailed Albatross

Species Specific Catch Categories Codes							
Code	**Species Name**	**Code**	**Species Name**	**Code**	**Species Name**	**Code**	**Species Name**
ALBC	Albacore Tuna	COHO	Coho salmon	OWFS	Ocean whitefish	SABL	Sablefish
ARTH	Arrowtooth Flounder	MOLA	Common mola	OLVE	Olive rockfish	SMNS	Salmon Shark
ARRA	Aurora rockfish	TSRK	Common thresher shark	ASRK	Pacific Angel Shark	SSOL	Sand Sole
BANK	Bank Rockfish	COPP	Copper rockfish	PBNT	Pacific Bonita	SPSK	Sandpaper skate
BTRY	Bat ray	CWCD	Cowcod Rockfish	PCOD	Pacific Cod	SHPD	Sheepshead
BSKT	Big skate	CSOL	Curlfin Sole	PFLT	Pacific flatnose	SRKR	Shortraker Rockfish
ISRK	Bigeye thresher shark	DBRK	Darkblotched Rockfish	GREN	Pacific grenadier	SSPN	Shortspine Thornyhead
BYEL	Black and Yellow rockfish	DSOL	Deepsea Sole	PWHT	Pacific Hake	SLGR	Silvergray rockfish
BLCK	Black rockfish	DOVR	Dover Sole	PHLB	Pacific Halibut	SLNS	Slender sole
BLSK	Black skate	DCRB	Dungeness Crab	PMCK	Pacific mackeral	SOCK	Sockeye salmon
BLGL	Blackgill rockfish	EGLS	English Sole	POP	Pacific Ocean Perch	SSRK	Soupfin Shark
BLUR	Blue rockfish	EULC	Eulachon	PDAB	Pacific Sanddabs	SPKL	Speckled rockfish
BSRK	Blue shark	FLAG	Flag rockfish	PSSK	Pacific Sleeper shark	DSRK	Spiny Dogfish Shark
BCAC	Boccacio Rockfish	FSOL	Flathead Sole	PSRK	Pelagic thresher shark	SNOS	Splitnose Rockfish
BRNZ	Bronzespotted rockfish	FCAT	Filetail catshark	PTRL	Petrale sole	RATF	Spotted ratfish
CSRK	Brown cat shark	GBAS	Giant sea bass	PNKR	Pink rockfish	STRY	Starry Flounder
BRWN	Brown rockfish	GPHR	Gopher rockfish	PINK	Pink salmon	STAR	Starry rockfish
BSOL	Butter Sole	GRAS	Grass rockfish	PLCK	Pollock	SSKT	Starry skate
LOBS	CA spiny lobster	GSTG	Green Sturgeon	QLBK	Quillback rockfish	THRS	Thresher Shark, Unid.
CBZN	Cabezon	GSPT	Greenspotted rockfish	RAGF	Ragfish	TIGR	Tiger rockfish
CLCO	Calico rockfish	GSRK	Greenstriped rockfish	RDBD	Redbanded rockfish	TREE	Treefish rockfish
CHLB	California Halibut	HNYC	Honeycomb rockfish	REDS	Redstripe rockfish	VRML	Vermilion rockfish
SCOR	California scorpionfish	HBSD	Humboldt Squid	REX	Rex Sole	WCRK	White Croaker
CSKT	California skate	KLPG	Kelp Greenling	RCRB	Rock crab	WBAS	White seabass
CNRY	Canary Rockfish	KLPR	Kelp rockfish	RCKG	Rock Greenling	WSTG	White Sturgeon
CLPR	Chilipepper Rockfish	LSRK	Leopard shark	RSOL	Rock Sole	WDOW	Widow Rockfish
CHNA	China rockfish	LCOD	Lingcod	RSTN	Rosethorn rockfish	WEEL	Wolf-eel
CHNK	Chinook salmon	LSKT	Longnose skate	ROSY	Rosy rockfish	YEYE	Yelloweye Rockfish
CHUM	Chum salmon	LSPN	Longspine Thornyhead	REYE	Rougheye rockfish	YTRK	Yellowtail Rockfish

Species Grouping Catch Categories Codes							
Code	**Species Name**	**Code**	**Species Name**	**Code**	**Species Name**	**Code**	**Species Name**
ANEM	Anemone, unid	SSHR	Nearshore Rockfish S	OSRK	Shark Other	SMLT	Smelt, unid
UCAT	Catshark, unid	NHBS	Non Humboldt Squid, Unid	NSLF	Shelf Rockfish N	SNLF	Snailfish, unid
OCRB	Crab Other	NEST	Non-Eulachon Smelt	SSLF	Shelf Rockfish S	SPNG	Sponge, unid
POUT	Eelpout, unid	OCTP	Octopus Unspecified	UDW1	Shortraker/Rougheye rockfish	TCRB	Tanner Crab
GRDR	Grenadier Unspecified	SAMN	Salmon Unspecified	SRMP	Shrimp and Prawns	THDS	Thornyhead Unspecified
UHAG	Hagfish, unid	SCLP	Sculpin, Unid	SKAT	Skates and Rays	THRS	Thresher Shark, unid
HERR	Herring, unid	USCU	Sea cucumber, Unid	NSLP	Slope Rockfish N	SQID	Unidentified Squid
UJEL	Jellyfish, unid	SEST	Sea Star	SSLP	Slope Rockfish S	USTG	Unidentified Sturgeon
UMCK	Mackeral Unspecified	SWHP	Sea Whip, unid	SLCK	Slickhead, Unid	UURC	Urchin, Unid
NSHR	Nearshore Rockfish N						

Minor Rockfish Species

Rockfish Categories

Currently, many regulations are designed to lessen the impacts of fishing on certain species of rockfish. Rockfish (except thornyheads) are divided into categories north and south of 40°10' N. latitude, depending on the depth where they are often caught: nearshore, shelf, or slope.

"Nearshore" is defined (by the California Nearshore Fishery Management Plan) as the area from the high-tide line offshore to a depth of 120 ft (20 fm). "Shelf" refers to the continental shelf, while "slope" refers to the continental slope.

Note: Species listed in bold have their own catch category names when caught in the opposite region. For example, bocaccio rockfish is listed in bold in the Shelf rockfish list North of 40°10' N. lat., therefore north of 40°10' N. lat., bocaccio rockfish is listed under the catch category NSLF, and south of 40°10' N. lat., bocaccio is in its own catch category: BCAC.

North of 40°10' N. lat.		South of 40°10' N. lat.
	NEARSHORE	
black- *Sebastes melanops*		black- *Sebastes melanops*
black and yellow- *S. chrysolmelas*		black and yellow- *S. chrysolmelas*
blue- *S. mystinus*		blue- *S. mystinus*
brown- *S. auriculatus*		brown- *S. auriculatus*
calico- *S. dallli*		**California scorpionfish-** Scorpaena guttata
china- *S. nebulosus*		calico- *S. dalli*
copper- *S. caurinus*		china- *S. nebulosus*
gopher- *S. carnatus*		copper- *S. caurinus*
grass- *S. rastrelliger*		gopher- *S. carnatus*
kelp- *S. atrovirens*		grass- *S. rastrelliger*
olive- *S. serranoides*		kelp- *S. atrovirens*
quillback- *S. maliger*		olive- *S. serranoides*
treefish- *S. serriceps*		quillback- *S. maliger*
		treefish- *S. serriceps*
	SHELF	
bronzespotted- *S. gilli*		bronzespotted- *S. gilli*
bocaccio- *S. paucispinis*		chameleon- *S. phillipsi*
chameleon- *S. phillipsi*		dwarf-red- *S. refianus*
chilipepper- *S. goodie*		flag- *S. rubrivinctus*
cowcod- *S. levis*		freckled- *S. lentiginosus*

North of 40°10′ N. lat.		South of 40°10′ N. lat.
dwarf-red- *S. refianus*	*SHELF CONT.*	greenblotched- *S. rosenblatti*
flag- *S. rubrivinctus*		greenspotted- *S. chlorostictus*
freckled- *S. lentiginosus*		greenstriped- *S. elongates*
greenblotched- *S. rosenblatti*		halfbanded- *S. semicinctus*
greenspotted- *S. chlorostictus*		honeycomb- *S. umbrosus*
greenstriped- *S. elongates*		mexican- *S. macdonaldi*
halfbanded- *S. semicinctus*		pink- *S. eos*
honeycomb- *S. umbrosus*		pinkrose- *S. simulator*
mexican- *S. macdonaldi*		pygmy- *S. wilsoni*
pink- *S. eos*		redstriped- *S. proriger*
pinkrose- *S. simulator*		rosethorn- *S. helvomaculatus*
pygmy- *S. wilsoni*		rosy- *S. rosaceus*
redstriped- *S. proriger*		silvergrey- *S. brevispinus*
rosethorn- *S. helvomaculatus*		speckled- *S. ovalis*
rosy- *S. rosaceus*		squarespot- *S. hopkinsi*
silvergrey- *S. brevispinus*		starry- *S. constellatus*
speckled- *S. ovalis*		stripetail- *S. saxicola*
squarespot- *S. hopkinsi*		swordspine- *S. ensifer*
starry- *S. constellatus*		tiger- *S. nigorcinctus*
stripetail- *S. saxicola*		vermilion- *S. miniatus*
swordspine- *S. ensifer*		yelloweye- *S. ruberrimus*
tiger- *S. nigorcinctus*		**yellowtail-** *S. flavidus*
vermilion- *S. miniatus*		
yelloweye- *S. ruberrimus*		
	SLOPE	
aurora- *S. aurora*		aurora- *S. aurora*
bank- *S. rufus*		bank- *S. rufus*
blackgill- *S. melanostomus*		blackgill- *S. melanostomus*
darkblotched- *S. crameri*		darkblotched- *S. crameri*
redbanded- *S. babcocki*		**pacific ocean perch-** *S. alutus*
rougheye- *S. aleutianus*		redbanded- *S. babcocki*
sharpchin- *S. zacentrus*		rougheye- *S. aleutianus*
shortraker- *S. borealis*		sharpchin- *S. zacentrus*
splitnose- *S. diploproa*		shortraker- *S. borealis*
yellowmouth- *S. reedi*		yellowmouth- *S. reedi*

WCGOP Codes

Gear Type

1 - Groundfish Trawl, Footrope < 8 inches (small footrope, not an OR Set-back Flatfish net)
2 - Groundfish Trawl, Footrope > 8 inches (large footrope)
3 - Midwater Trawl
4 - Danish/ Scottish Seine (Trawl)
5 - Other Trawl Gear
7 - Vertical Hook and Line Gear
8 - Pole (Commercial)
9 - Other Hook and Line Gear
10 - Fish Pot
12 - Shrimp Trawl Single Rigged
13 - Shrimp Trawl Doubled Rigged
14 - All Net Gear Except Trawl
15 - All Troll Gear
16 - All Other Miscellaneous Gear
17 - OR Set Back Flatfish Net (Pineapple Trawl)
19 - Longline Gear (fixed hooks)
20 - Longline Gear (snap-on hooks)

Gear Performance

1 - No problem
2 - Pot was in the haul
3 - Net hung up
4 - Net ripped
5 - Trawl net or codend lost, pot(s) lost, other gear lost
7 - Other problem – Document in the comments section.
8 - Retrieved gear

Weight Method

1 - Actual Weight
2 - Bin/ Trawl Alley Volume
3 - Basket Weight Determination (BWD)
5 - OTC-Retained
6 - Other
7 - Vessel Estimate
8 - Extrapolation
9 - P. Halibut Length/Weight Conversion
11 - Retained + Discard
13 - Tally Sample
14 - Visual Experience
15 - Visual Spatial
19 - P. Halibut Length/Weight Extrapolation

Sample Methods – Species Composition

Trawl Sample Methods
1 - Whole Haul
2 - Single Basket
3 - Multiple Basket
Fixed Gear Sample Methods
4 - Fixed Gear Sample(weights not derived from a fish ticket)
5 - Fixed Gear - Fish Ticket Verified
6 - Fixed Gear - Fish Ticket Unverified
Sample Methods – Biospeciemen & Length Frequency
6 - Outside and Nonrandom
7 - Outside and Random
8 - Inside and Nonrandom
9 - Inside and Random
10 - P. Halibut Visual Length Estimate

Reason For Discard

11 - Incidental/Accidental
12 - Drop-Off
13 - Market
14 - Other
15 - Predation
16 - Regulation
17 - Safety
18- Market (Dockside only)
19- Utilized on board

Dissection Type

1 - Otoliths
2 - Scales
3 - Snout
4 - Tissue/ Fin Clip
5 - Fin Ray (Dead GSTG only)
7 - Whole Specimen
8 - Tag/ Band
9 - Tagged by Observer

Sea Bird Gear Codes (Limited Entry FG)

0- No
3- Buoy Line
4- Weights
5- Night Setting (exclusive)
6- Other
7- Single Streamer
8- Double Streamers

P. Halibut Viabilities

Trawl & Pot
E - Excellent
P - Poor
D - Dead
Longline
MI - Minor
MO - Moderate
S - Severe
D - Dead

Rockfish Release Methods (Nearshore only)

TO-Thrown directly over
MV-Mostly vented
DC-Mostly released at depth-cage
DW-Mostly Released at depth- weighted line
DO-Mostly Released at depth- other
OM-Other method of release
NC-Not Collected

Vessel Logbook Names

WOC Trawl-used in the the LE Trawl fishery
CBFA- used in the Community Based Fishing Association
Catch Shares-used only in Catch Shares fishery

WCGOP Mailing Addresses

West Coast Groundfish Observer Program
Northwest Fisheries Science Center (NWFSC)
2725 Montlake Boulevard East
Seattle, WA 98112

Email: nmfs.nwfsc.fram.observer@noaa.gov

Washington

NWFSC
2725 Montlake Boulevard East
Seattle, WA 98112
(206) 860-3293 Office
(206) 860-3394 Fax

Oregon

Hatfield Marine Science Center
2032 SE OSU Dr.
Newport, OR 97365
(541) 867-0527 Office
(541) 867-0505 Fax

Point Adams Research Station
PO Box 155 (520 Heceta Place)
Hammond, OR 97121
(503) 861-1818 Office
(503) 861-2589 Fax

California

Crescent City Office
875 5th St.#11
Crescent City, CA 95531
(707) 440-9155 Office

Eureka Office
427 "F" St. Suite 217
Eureka, CA 95501
(707) 443-3228 Office

Morro Bay Office
1187 Main Street
Morro Bay, CA 93442
(805) 772-1131 Office
(805) 772-1136 Fax

To reach any of the WCGOP Coordinators, call toll-free

1-866-780-8064

WCGOP Contact Phone Numbers

To reach any of the NMFS Coordinators, please call toll-free 1-866-780-8064.

Management

Jon McVeigh
Program Manager
NW Fisheries Science Center
Seattle, WA
c: 206.327.2851
w: 206.302.2423
f: 206.860.3394
e: Jon.McVeighi@noaa.gov

Jim Benante
Program Manager
NW Fisheries Science Center
Seattle, WA
c: 206.979.7226
w: 206.860.6794
f: 206. 860.3394
e: Jim_Benante@psmfc.org

WCGOP Coordinators

John LaFargue:
CA Coordinator
Eureka, CA
c: 530.604.7386
w: 707.443.3228
f: 707. 443.3002
e: John.Lafargue@noaa.gov

Scott Leach
WA/OR Coordinator
HM Science Center
Newport, OR
c: 541.366.8080
w: 541.351.8250
f: 541. 867.0505
e: Scott.Leach@noaa.gov

Database Support

Neil Riley
Data Analyst
NW Fisheries Science Center
Seattle, WA
w: 206.861.7607
f: 206.860.3394
e: Neil.Riley@noaa.gov

Support Staff

Eric Brasseur
Gear Technician
HM Science Center
Newport, OR
c: 757.897.9651
w: 541.867.0509
f: 206. 860.3394
e: Ebrasseur@psmfc.org

Rebecca Hoch
Administrative Assistant
NW Fisheries Science Center
Seattle, WA
c: 206.437.2415
f: 206.860.3394
e: Rebecca.Hoch@noaa.gov

Analysts

Jason Jannot
Data Analyst
NW Fisheries Science Center
Seattle, WA
w 206.302.1755
f: 206.860.3394
e: Jason.Jannot@noaa.gov

Yong-Woo Lee
Data Analyst
NW Fisheries Science Center
Seattle, WA
w 206.860.3360
f: 206.860.3394
e: Yong-Woo.Lee@noaa.gov

Kayleigh Somers
Data Analyst
NW Fisheries Science Center
Seattle, WA
w 206.302.2413
f: 206.860.3394
e: Kayleigh.Somers@noaa.gov

Debriefers

John Bieraugel
Debriefer
Crescent City, CA
c: 707.218.7390
w: 707.440.9155
f: 707.443.3002
e: john.bieraugel@noaa.gov

Jennifer Cramer
Debriefer
HM Science Center
Newport, OR
c: 503.791.2706
w: 541.867.0561
f: 541.867.0505
e: Jennifer.Cramer@noaa.gov

Tim Peretti
Debriefer
Eureka, CA
c: 707.845.0077
w: 707.443.1884
f: 707.443.3002
e: Timothy.Peretti@noaa.gov

Phillip Bizzell
Debriefer
Pt. Adams Research Station
Hammond, OR
c: 360.298.8152
w: 503 861 1818 ext. 21
f: 503.861.2589
e: Phillip.Bizzell@noaa.gov

Jason Eibner
Debriefer
HM Science Center
Newport, OR
c: 541.961.1321
w: 541.867.0592 ext 563
f: 541. 867.0505
e: Jason.Eibner@noaa.gov

Ryan Shama
Debriefer
Pt Adams Research Station
Hammond, OR
c: 206.437.1629
w: 503 861 1818 ext. 33
f: 503.861.2589
e: Ryan.Shama@noaa.gov

Eli Coplen
Debriefer
Morro Bay, CA
c: 805.400.7992
w: 805.772.1131
f: 805.772.1136
e: Eli.Coplen@noaa.gov

Kate Guthrie
Debriefer/Program Assistant
NW Fisheries Science Center
Seattle, WA
w: 206.860.3476
f: 206.860.3394
e: Kate.Guthrie@noaa.gov

Bo Whiteside
Debriefer
HM Science Center
Newport, OR
c: 541.270.1805
w: 541.867.0528
f: 541.867.0505
e: Bo.Whiteside@noaa.gov

Christa Colway
Training Coordinator/Debriefer
HM Science Center
Newport, OR
c: 206.437.2349
w: 541.867.0520
f: 541.867.0505
e: Christa Colway@noaa.gov

Toby Mitchell
Debriefer
HM Science Center
Newport, OR
c: 541.961.5428
w: 541.867.0514
f: 541.867.0505
e: Toby.Mitchell@noaa.gov

Jason Vestre
Debriefer
Morro Bay, CA
c: 805.305.8757
w: 805.772.1132
f: 805.772.1136
e: Jason.Vestre@noaa.gov

PSMFC Liasons/ NOAA Office of Law Enforcement

Mike Fukushima
PSMFC
w: 707.441.5797

Chris Matthews
PSMFC
contact for assistance with PSMFC email passwords
w: 503.595.3100
e: cmatthews@psmfc.org

NOAA OLE Officer
Joe Snyder
w: 541.867.0580
e: Joe.Snyder@noaa.gov

Random Number Table

How to Use the Random Number Table

To use the random number table, enter the table at a random point. The easiest way to do this is by closing your eyes and placing your finger on the table. The column and row nearest your finger is the starting point. Determine how many digits in the row you are using: if you need numbers between 1 and 250, use three digits in the row. If you need numbers between 1 and 25, use two digits in the row, and so on. Decide in which direction you will move through the table. Then proceed in any direction through the table (even diagonally), recording appropriate numbers and skipping numbers too high or repeated, until you have enough random numbers. You should decide on a direction and enter the table at a different random starting point every time you use it.

For example, if you need to choose 3 numbers between 1 and 25, you could enter the table by placing your finger on the table to choose a column and row. Your criterion is two digit numbers between 01 and 25 (inclusive). For this example, you decided to work up the column from your starting point. As you move up the column, the first number you encounter is 14. This is a two-digit number between 01 and 25; it fits the criterion, so you write it down. The next number is 09; it also fits the criterion, so you write it down. The next number is 58 and does not fit the criterion so you skip this number. Keep moving up the column, skipping the numbers that do not fit the criterion, until you choose the all the numbers you need.

8	3	7	9	7	2	1	9	6	7	0	5	4	1	4	7	3	5	5	0	7
8	6	3	6	2	0	7	1	8	8	2	8	1	4	6	3	6	7	3	8	4
7	5	5	5	9	2	6	2	6	5	7	1	9	6	4	1	2	4	3	6	9
1	5	9	2	3	6	3	8	7	1	0	8	2	1	4	9	0	9	8	0	1
3	5	0	6	2	9	0	6	7	6	6	5	3	8	5	6	2	5	1	0	6
4	2	1	2	6	3	5	3	6	4	8	9	2	2	9	7	8	5	7	0	3
5	0	3	1	1	4	2	5	2	3	2	6	3	3	4	9	5	4	2	5	2
5	0	6	0	9	4	9	3	4	9	8	7	7	2	4	2	3	5	8	1	3
0	1	6	1	4	7	4	9	7	6	7	9	6	3	4	5	6	7	8	5	9
1	0	6	7	3	4	8	1	2	3	7	1	1	0	8	4	2	1	9	3	8
3	1	7	0	8	0	0	9	7	2	3	0	8	5	5	4	8	7	9	9	1
0	6	2	0	6	6	2	5	1	8	7	6	2	6	3	0	1	4	1	4	8
4	2	1	9	4	2	2	6	7	6	0	0	3	3	9	9	3	7	4	2	4
6	2	1	2	6	1	6	9	8	2	0	6	6	4	1	5	0	5	2	9	6
0	8	7	9	6	0	7	1	4	5	8	8	5	3	2	2	5	3	8	8	7
0	0	2	2	5	5	0	9	3	8	6	1	0	6	7	4	3	9	9	4	1
4	8	4	8	9	3	3	5	9	2	3	8	5	5	7	3	9	5	2	3	4
8	2	8	2	8	6	6	8	6	1	6	0	0	4	8	8	9	6	5	6	8
0	2	6	8	8	3	7	2	6	6	8	8	7	4	2	4	1	2	0	3	4
1	9	9	4	8	3	6	0	4	8	9	6	1	5	8	2	5	0	8	2	4

Weights, Measures, and Conversions

Abbreviations

inch (in)	millimeter (mm)	kilograms (kg)	minute (min)	foot (ft)
centimeter (cm)	metric ton (mt)	pounds (lbs)	meter (m)	liter (L)
ton (t)	kilometer (km)	quart (qt)	mile (mi)	celcius ©
latitude (lat)	farenheit (F)	grams (g)	longitude (lon)	

Weights and Measures

1 in = 2.540 cm 1cm = 10 mm = 0.3937 in

1 ft = 0.3048 m = 0.1667 fathoms 1m = 100 cm = 3.2808 ft = 0.5468 fathoms

1 fathom = 6 ft = 1.829 m 1000 m = 1 km = 0.6214 statute mi

1 L = 1.0567 U.S. qt

F° = (1.8 x C°) + 32C° = 5/9(F° - 32)

1 statute m = 5,280 ft = 1.609 km = 0.86899 nautical mi = 880 fathoms

1 nautical mi = 1.15078 statute mi = 1 min lat = 1.852 km = 1,012.6859 fathoms = 1,852 m

1 fathom = 0.0009875 nautical mi = 0.0011364 statute mi

1 lb = 0.4536 kg

total catch wt. in lbs ÷ 2.2046 = total catch wt. in kg

1 mt = 1,000 kg = 2204.6 lbs.

Area, Volume and Product Formulas

Number of Product Units x Average Unit Weight = Total Weight of Product

Area of a circle = pr^2 Circumference = 2 pr (p = 3.1416)

Area of a square or rectangle = length × width

Area, Volume and Product Formulas

Number of Product Units x Average Unit Weight = Total Weight of Product

Area of a circle = pr^2 Circumference = 2 pr (p = 3.1416)

Area of a square or rectangle = length × width

Area of a triangle = ½ X base X height

Volume of a right angle cone = 1/3 X π r^2h

Volume of a Sphere = 4/3 X π X r^3

Length of the triangle hypotenuse "C" where A and B equal the length of the opposite two sides:

$$A^2 + B^2 = C^2$$

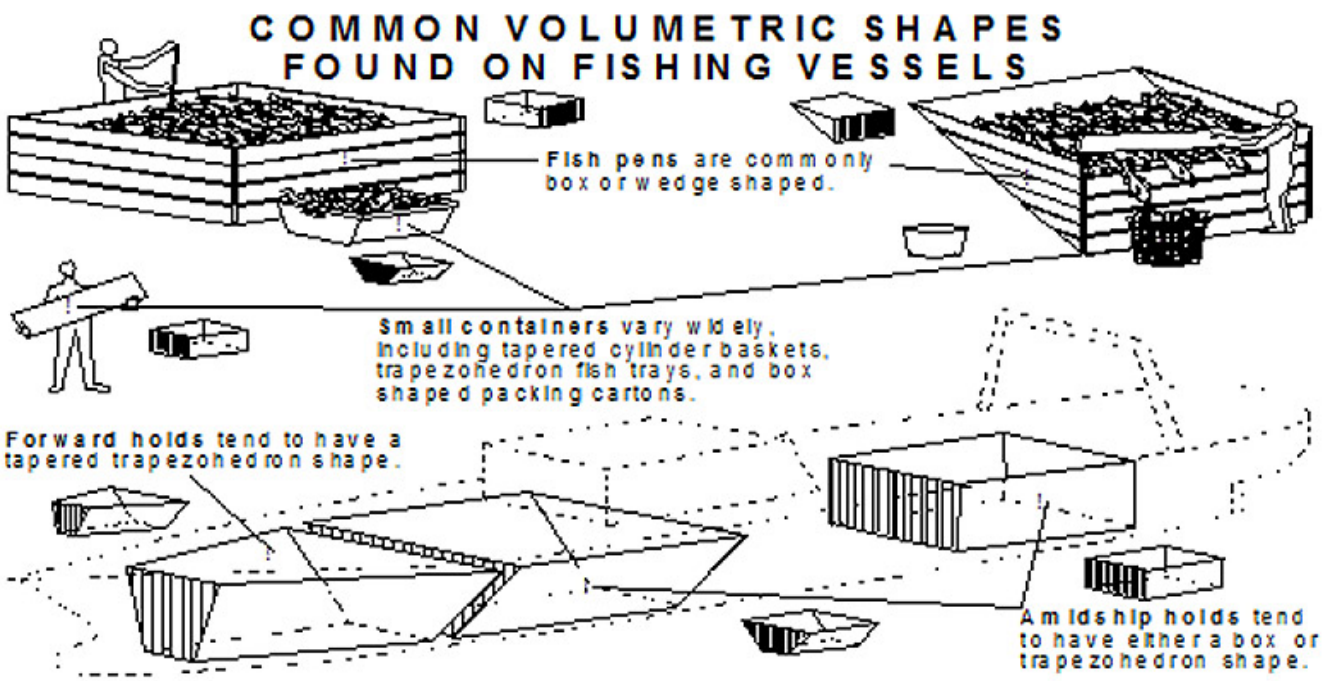

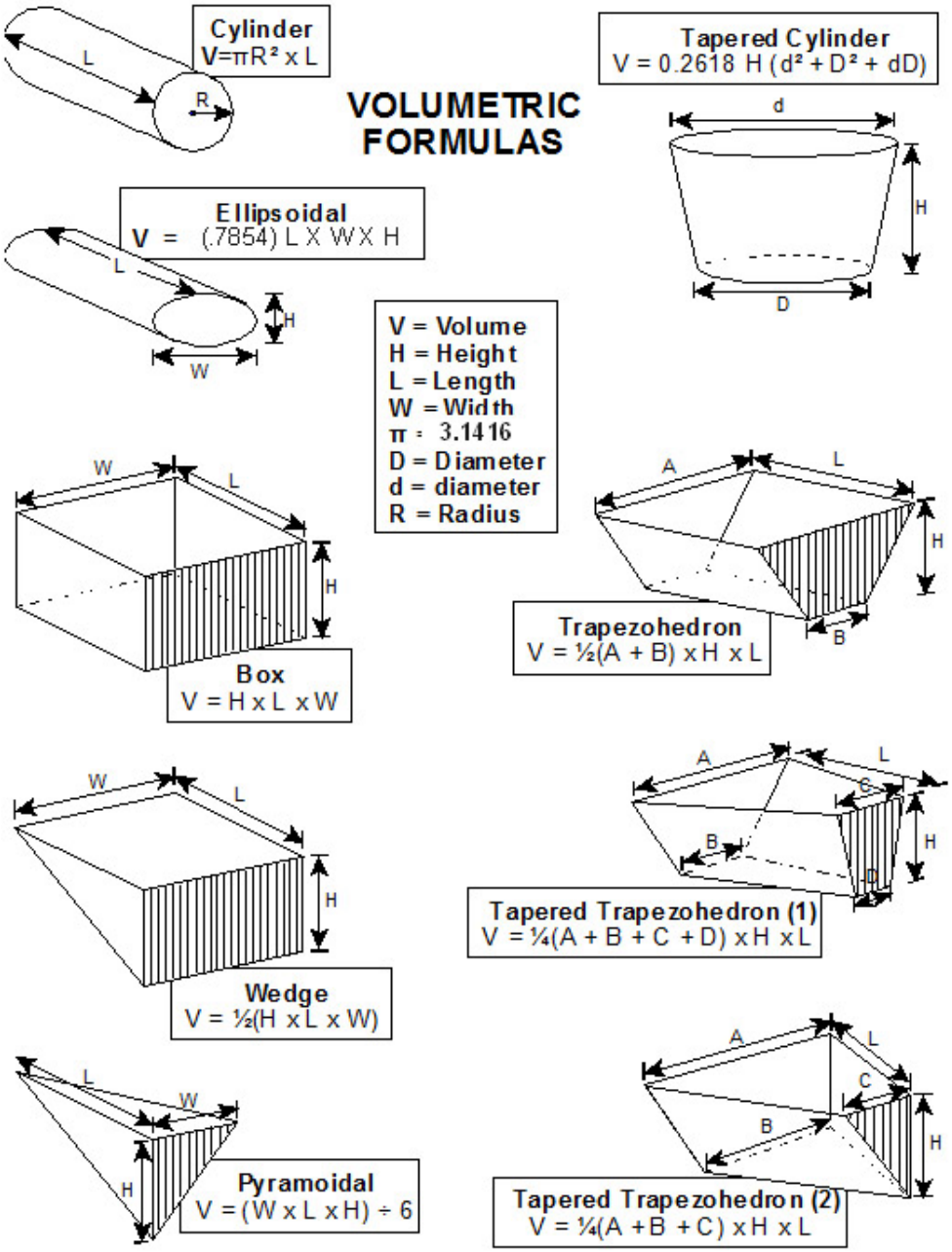
VOLUMETRIC FORMULAS
Cylinder
V=πR² x L
L
R
Tapered Cylinder
V = 0.2618 H (d² + D² + dD)
d
H
D
Ellipsoidal
V = (.7854) L X W X H
L
H
W
V = Volume
H = Height
L = Length
W = Width
π = 3.1416
D = Diameter
d = diameter
R = Radius
W
L
H
Box
V = H x L x W
A
L
H
B
Trapezohedron
V = ½(A + B) x H x L
W
L
H
Wedge
V = ½(H x L x W)
A
L
C
B
H
D
Tapered Trapezohedron (1)
V = ¼(A + B + C + D) x H x L
L
W
H
Pyramoidal
V = (W x L x H) ÷ 6
A
L
C
B
H
Tapered Trapezohedron (2)
V = ¼(A + B + C) x H x L

Pacific Halibut Length/Weight Table

Centimeter	Pounds
10	0.02
11	0.02
12	0.02
13	0.04
14	0.04
15	0.07
16	0.07
17	0.09
18	0.11
19	0.13
20	0.15
21	0.18
22	0.20
23	0.24
24	0.26
25	0.31
26	0.35
27	0.40
28	0.46
29	0.51
30	0.57
31	0.62
32	0.71
33	0.77
34	0.84
35	0.93
36	1.01
37	1.10
38	1.21
39	1.32
40	1.43
41	1.59
42	1.68
43	1.81
44	1.94
45	2.09
46	2.25
47	2.43
48	2.58
49	2.76

Centimeter	Pounds
50	2.95
51	3.15
52	3.35
53	3.57
54	3.79
55	4.01
56	4.25
57	4.52
58	4.76
59	5.05
60	5.31
61	5.62
62	5.93
63	6.24
64	6.57
65	6.90
66	7.25
67	7.61
68	7.98
69	8.38
70	8.77
71	9.19
72	9.61
73	10.05
74	10.49
75	10.98
76	11.44
77	11.95
78	12.46
79	12.99
80	13.51
81	14.07
82	14.64
83	15.23
84	15.83
85	16.45
86	17.09
87	17.75
88	18.41
89	19.09

Centimeter	Pounds
90	19.80
91	20.53
92	21.25
93	22.02
94	22.80
95	23.59
96	24.41
97	25.24
98	26.08
99	26.96
100	27.87
101	28.77
102	29.70
103	30.67
104	31.64
105	32.63
106	33.64
107	34.68
108	35.74
109	36.84
110	37.94
111	39.07
112	40.21
113	41.38
114	42.59
115	43.81
116	45.06
117	46.32
118	47.62
119	48.94
120	50.29
121	51.65
122	53.07
123	54.48
124	55.93
125	57.41
126	58.91
127	60.43
128	61.99
129	63.56

Centimeter	Pounds
130	65.17
131	66.82
132	68.48
133	70.17
134	71.89
135	73.66
136	75.44
137	77.25
138	79.08
139	80.95
140	82.87
141	84.79
142	86.75
143	88.76
144	90.79
145	92.84
146	94.93
147	97.05
148	99.21
149	101.39
150	103.62
151	105.87
152	108.16
153	110.50
154	112.83
155	115.24
156	117.66
157	120.13
158	122.62
159	125.16
160	127.71
161	130.32
162	132.96
163	135.65
164	138.36
165	141.12
166	143.90
167	146.72
168	149.54
169	152.49

Centimeter	Pounds
170	155.45
171	158.42
172	161.44
173	164.51
174	167.60
175	170.75
176	173.92
177	177.14
178	180.40
179	183.71
180	187.06
181	190.46
182	193.87
183	197.36
184	200.86
185	204.43
186	208.03
187	211.67
188	214.71
189	218.50
190	222.89
191	226.70
192	230.56
193	234.48
194	238.45
195	242.44
196	246.50
197	250.60
198	255.74
199	258.93
200	263.17
201	267.46
202	271.79
203	276.17
204	280.60
205	285.10
206	289.62
207	294.21
208	298.84
209	303.51

Centimeter	Pounds
210	308.25
211	313.03
212	317.86
213	322.73
214	327.67
215	332.65
216	337.70
217	342.79
218	347.93
219	353.13
220	358.38
221	363.69
222	369.05
223	374.45
224	379.92
225	385.45
226	391.03
227	396.67
228	402.36
229	408.09
230	413.91
231	419.76
232	425.69
233	431.66
234	437.68
235	443.76
236	449.91
237	456.13
238	462.39
239	468.72
240	475.09
241	481.55
242	488.05
243	494.60
244	501.24
245	507.92
246	514.66
247	521.48
248	528.36
249	535.28

Injury Key for Trawl Caught Pacific Halibut

1a. Fish is alive ..... **Go to 2a**

1b. Fish is dead when sorted from the catch ..... **Code DEAD**

- Fish is in rigor and lifeless, even if no apparent injuries.
- Gills appear washed out, i.e., dull red, pink, or white in color.
- Mouth may contain sediment.

2a. Body of fish appears uninjured, or has only minor injuries ..... **Go to 3a**

2b. Injuries to fish are significant and obvious ..... **Code DEAD**

- Body cavity is ripped open, exposing internal organs.
- Body tissue may be torn or ripped in a rough, ragged manner.
- Red hemorrhaging observed on 25% or more of the white side of fish.

3a. Fish is able to close operculum when stimulated ..... **Go to 4a**

- Operculum is closed strongly or weakly, but pressure is evident.
- Operculum may not stay closed for long, though pressure may last up to 5 seconds or longer.

3b. Fish cannot close operculum, even when stimulated ..... **Code DEAD**

4a. Fish displays activity and has muscle tone ..... **Go to 5a**

- Fish displays a minimal amount of activity, especially when stimulated.
- May be able to clench jaw tightly.

4b. Fish exhibits no muscle tone ..... **Code DEAD**

5a. Fish is not bleeding, or only slightly bleeding, if at all ..... **Go to 6a**

5b. Blood is flowing freely and continuously in large quantities (profusely) ..... **Code DEAD**

- Bleeding is coming from a torn or severed gill arch, or a body injury.

6a. Body injuries are minimal, perhaps difficult to find ..... **Go to 7a**

- May consist of superficial nicks or cuts on body.
- Less than10% of dorsal and anal fin area is frayed.

6b. Body injuries are readily apparent ..... **Code POOR**

- Skin is damaged with abrasions.
- Cuts and lacerations in body extend through the skin and just barely into the flesh (not deeply).
- Dorsal and anal fin area is frayed between 10-50%.
- Fin edges may be bleeding.
- Roughly 10-25% of the white side of fish shows red hemorrhaging.

7a. Operculum pressure is strong and sustained ..... **Go to 8a**

7b. Operculum pressure is weak and not sustained..... **Code POOR**

8a. Fish is strong and lively, displaying good muscle tone..... **Go to 9a**

- Fish is flopping around the deck , hard to control.
- Jaw may be tightly clenched, difficult to open.

8b. Fish appears weak..... **Code POOR**

- Movement is intermittent, perhaps occurring when provoked or stimulated.
- Body is limp.

9a. Fish is bleeding from gills..... **Code POOR**

- Blood is flowing continuously, slow and steadily, but not profusely.
- Gills are deep to bright red in color.

9b. No bleeding observed..... **Code EXCELLENT**

- Gills are deep red in color.

Injury Key for Pot Caught Pacific Halibut

1a. Fish is alive ..... **Go to 2a**

1b. Fish is dead when sorted from the catch..... **Code DEAD**

- Fish is in rigor and lifeless, even if no apparent injuries.
- Gills appear washed out, i.e., dull red, pink, or white in color.

2a. No penetration of the body or head by sand fleas ..... **Go to 3a**

- Membranes surrounding eyes and anus are intact, without any holes from sand fleas.
- A few sand fleas may be seen on body and can be wiped off with your hand.
- Typically, no penetration has occurred when only a few (e.g., <10) sand fleas are found on the body.

2b. Sand fleas have penetrated the body via the eyes, fins, or anus ..... **Code DEAD**

- Membrane surrounding eye may be partially or completely missing.
- Dorsal and/or anal fin membranes may be eaten away, leaving fin rays exposed.
- Skin on the body is separated from tissue where sand fleas have eaten.

3a. No predation of the fish's body by crabs in the pot is noted..... **Go to 4a**

3b. Predation by crabs has occurred ..... **CODE DEAD**

- Crabs in the pot may have attacked and eaten the fish.

4a. Body of fish appears uninjured, or has only minor injuries ..... **Go to 5a**

4b. Injuries to fish are obvious and significant ..... **Code DEAD**

- Body cavity is ripped open, exposing internal organs.
- Body tissue may be torn or ripped in a rough, ragged manner.
- Red hemorrhaging observed on 25% or more of the white side of fish.

5a. Fish is able to close operculum when stimulated..... **Go to 6a**

- Operculum is closed strongly or weakly, but pressure is evident.
- Operculum may not stay closed for long, though pressure may last up to 5 seconds or longer.

5b. Fish cannot close operculum, even when stimulated..... **Code DEAD**

6a. Fish displays activity and has muscle tone..... **Go to 7a**

- Fish displays a minimal amount of activity, especially when stimulated.
- May be able to clench jaw, perhaps tightly.

6b. Fish exhibits no muscle tone..... **Code DEAD**

- Physical activity absent or limited to fin ripples or twitches.
- Little, if any, response to stimuli.
- Jaw is hanging open and is slack.

7a. Fish is not bleeding, or only slightly bleeding, if at all ..... **Go to 8a**

7b. Blood is flowing freely and continuously in large quantity (profusely) ..... **Code DEAD**

- Bleeding is coming from fin edges or a body injury.

8a. Body injuries are minimal, perhaps difficult to find ..... **Go to 9a**

- May consist of superficial nicks or cuts on body.
- Less than 10% of dorsal and anal fin area is frayed.
- Hemorrhaging of skin on white side limited to 5-10% of surface area.

8b. Body injuries are readily apparent ..... **Code POOR**

- Skin is damaged with abrasions.
- Cuts and lacerations in body extend through the skin and just barely into the flesh (not deeply).
- Dorsal and anal fin area is frayed between 10-50%. Fin edges may be bleeding slightly.
- Roughly 10-25% of the white side of fish shows red hemorrhaging.

9a. Operculum pressure is strong and sustained ..... **Go to 10a**

- Fish should be able to close operculum for at least 5-10 seconds.

9b. Operculum pressure is weak and not sustained ..... **Code POOR**

10a. Fish is strong and lively, displaying good muscle tone ..... **Go to 11a**

- Fish is flopping around the deck, hard to control.
- Jaw may be tightly clenched, difficult to open.

10b. Fish appears weak ..... **Code POOR**

- Movement is intermittent and of short duration.
- Perhaps occurring when provoked or stimulated.
- Body appears limp, not in rigor mortis.

11a. Fish is bleeding from fin edges or body ..... **Code POOR**

- Blood is oozing continuously from fin edges or body wounds.
- Gills are deep to bright red in color.

11b. No bleeding observed ..... **Code EXCELLENT**

- Gills are deep red in color.
- Fins are not bleeding.

Injury Key for Hook & Line Caught Pacific Halibut

1a. Fish is alive ..... **Go to 2a**

1b. Fish is dead when brought to the surface on the gear ..... **Code DEAD**

- Fish is in rigor and lifeless, even if no apparent injuries.
- Gills appear completely devoid of blood (light pink or white in color).

2a. Body shows no signs of marine mammal predation ..... **Go to 3a**

- Fish's body is intact.
- Flesh may be torn, but no missing tissue.

2b. Body is missing pieces of flesh ..... **Code DEAD**

- Pieces of tissue are missing from predation by marine mammals.
- Missing pieces are typical of bites from sea lions or other large marine mammals.

3a. No penetration of the body or head by sand fleas ..... **Go to 4a**

- Membranes surrounding eyes and anus are intact, without any holes from sand fleas.
- A few sand fleas may be seen on body and can be wiped off with your hand.
- Typically, no penetration occurs when only a few (e.g., <10) sand fleas are found on the body.

3b. Sand fleas have penetrated the body via the eyes, fins, or anus ..... **Code DEAD**

- Membrane surrounding eye may be partially or completely missing.
- Dorsal and/or anal fin membranes may be eaten away, leaving finrays exposed.
- Skin on the body is separated from tissue where sand fleas have eaten.

4a. No wounds of any kind to abdominal organs. Abdominal wall not punctured ..... **Go to 5a**

4b. Abdominal organs are damaged, possibly by a gaff ..... **Code DEAD**

- Abdominal cavity wall is punctured or torn.
- Viscera are visible and exposed, and may be protruding.

5a. Fish is not bleeding from gills (but may be bleeding from elsewhere) ..... **Go to 6a**

5b. Fish is bleeding from gills ..... **Code DEAD**

- Bleeding is occurring from a torn or severed gill arch.

6a. Fish is not bleeding at all, or bleeding is minor to moderate (not from gills) ..... **Go to 7a**

- Blood may be seen around mouth and/or jaw.
- Blood may be oozing continuously, or bleeding may be continuing very slowly a few drops at a time, or bleeding may have stopped.

6b. Bleeding is severe ..... **Code DEAD**

- Blood from any source is flowing freely and continuously in large quantity.

7a. Injuries to head and/ or jaw are minor to moderate. ..... **Go to 8a**

- No structures are missing

7b. Major injuries to head and jaw, resulting in missing pieces ..... **Code SEVERE**

- Side of the head, possibly including the jaw, has been torn loose and missing from the fish, and/or lower jaw has been torn away and is missing.

8a. Wounds to the head (forward of preopercle and above cheek and jaw) are only surface scratches on the skin ..... **Go to 9a**

8b. Skin on head (forward of preopercle) is ripped and torn deeply ..... **Code SEVERE**

- Internal organs are likely exposed.

9a. Eye or eye socket is not punctured ..... **Go to 10a**

9b. Eye or eye socket is punctured ..... **Code MODERATE**

10a. No wounds to the body are evident ..... **Go to 11a**

10b. Wounds in body consist of puncture holes in skin, with possibly a flesh tear ..... **Code MODERATE**

11a. Lower jaw is significantly damage ..... **Code MODERATE**

- Lower jaw may be broken into 2 pieces at the snout, but each is still attached at the base of the jaw.
- Jaw may be torn on one side or the other, possibly extending through the cheek.

11b. Damage to lower jaw, if any, is slight ..... **Code MINOR**

- Injuries include the hook entrance/exit hole around the jaw or in the cheek, or a tear in the cheek.
- A piece of the lip may be torn and hanging from the jaw. If gangion was cut, the hook and some length of residual gangion may be hanging from the mouth.

50 CFR Part 660.140(h) Observer Program Regulations

provided such discards are accounted for and deducted from QP in the vessel account. Whiting vessels sorting at sea must discard Pacific halibut and such discard mortality must be accounted for and deducted from IBQ pounds in the vessel account. Whiting vessels sorting at-sea may discard non-IFQ species and non-groundfish species. The sorting of catch, weighing and discarding of any IFQ or IBQ species must be monitored by the observer.

(h) Observer requirements {added at 75 FR 78344, 12/15/2010}

(1) Observer coverage requirements.

(i) Coverage. {revised at 76 FR 74725, 12/1/2011; corrected at 77 FR 55153, 09/07/12, effective 09/24/12}

(A) Any vessel participating in the Shorebased IFQ Program must carry a NMFS-certified observer during any trip and must maintain observer or catch monitor coverage while in port until all fish from that trip have been offloaded. A vessel is exempted from this requirement while remaining docked in port, if the observer makes available to the catch monitor an observer program form reporting the weight and number of those overfished species identified in §660.112(b)(1)(xiii) that were retained onboard the vessel during that trip and noting any discrepancy in those species between the vessel operator and observer. If a vessel gets underway in port or delivers fish from an IFQ trip to more than one IFQ first receiver, an observer must remain onboard the vessel while the vessel is underway and during any transit between delivery points.

(B) Any vessel 125 ft (38.1 m) LOA or longer that is engaged in at-sea processing must carry two NMFS-certified observers, and any vessel shorter than 125 ft (38.1 m) LOA that is engaged in at-sea processing must carry one NMFS-certified observer, each day that the vessel is used to take, retain, receive, land, process, or transport groundfish.

(ii) Observer deployment limitations and workload. Observer must not be deployed for more than 22 calendar days in a calendar month. The observer program may issue waivers to allow observers to work more than 22 calendar days per month when it's anticipated one trip will last over 20 days or for issues with observer availability due illness or injury of other observers.

(A) If an observer is unable to perform their duties for any reason, the vessel is required to be in port within 36 hours of the last haul sampled by the observer.

(B) [Reserved]

(iii) Refusal to board. Any boarding refusal on the part of the observer or vessel must be immediately reported to the observer program and NOAA OLE by the observer provider. The observer must be available for an interview with the observer program or NOAA OLE if necessary.

(2) Vessel responsibilities. An operator and/or crew of a vessel required to carry an observer must provide:

(i) Accommodations and food.

(A) Accommodations and food for trips less than 24 hours must be equivalent to those provided for the crew.

(B) Accommodations and food for trips of 24 hours or more must be equivalent to those provided for the crew and must include berthing space, a space that is intended to be used for sleeping and is provided with installed bunks and mattresses. A mattress or futon on the floor or a cot is not acceptable if a regular bunk is provided to any crew member, unless other arrangements are approved in advance by the Regional Administrator or their designee.

(ii) Safe conditions.

(A) Maintain safe conditions on the vessel for the protection of observers including adherence to all U.S. Coast Guard and other applicable rules, regulations, statutes, and guidelines pertaining to safe operation of the vessel, including, but not limited to rules of the road, vessel stability, emergency drills, emergency equipment, vessel maintenance, vessel general condition and port bar crossings. An observer may refuse boarding or reboarding a vessel and may request a vessel to return to port if operated in an unsafe manner or if unsafe conditions are identified.

(B) Have on board a valid Commercial Fishing Vessel Safety Decal that certifies compliance with regulations found in 33 CFR Chapter I and 46 CFR Chapter I, a certificate of compliance issued pursuant to 46 CFR 28.710 or a valid certificate of inspection pursuant to 46 U.S.C. 3311.

(iii) Computer hardware and software. [Reserved]

(iv) Vessel position. Allow observer(s)access to the vessel's navigation equipment and personnel, on request, to determine the vessel's position.

(v) Access. Allow observer(s) free and unobstructed access to the vessel's bridge, trawl or working deck, holding bins, sorting areas, cargo hold, and any other space that may be used to hold, process, weigh, or store fish at any time.

(vi) Prior notification. Notify observer(s) at least 15 minutes before fish are brought on board to allow sampling the catch.

(vii) Records. Allow observer(s) to inspect and copy any state or Federal logbook maintained voluntarily or as required by regulation.

(viii) Assistance. Provide all other reasonable assistance to enable observer(s) to carry out their duties, including, but not limited to:

(A) Measuring decks, codends, and holding bins.

(B) Providing a designated working area on deck for the observer(s) to collect, sort and store catch samples.

(C) Collecting samples of catch.

(D) Collecting and carrying baskets of fish.

(E) Allowing the observer(s) to collect biological data and samples.

(F) Providing adequate space for storage of biological samples.

(G) Providing time between hauls to sample and record all catch.

(H) Sorting retained and discarded catch into quota pound groupings.

(I) Stowing all catch from a haul before the next haul is brought aboard.

(ix) Sampling station. To allow the observer to carry out the required duties, the vessel owner must provide an observer sampling station that is:

(A) Accessible. The observer sampling station must be available to the observer at all times.

(B) Limits hazards. To the extent possible, the area should be free and clear of hazards including, but not limited to, moving fishing gear, stored fishing gear, inclement weather conditions, and open hatches.

(x) Transfers at sea. Transfers at-sea are prohibited.

(3) Procurement of observer services

(i) Owners of vessels required to carry observers under paragraph (h)(1) of this section must arrange for observer services from a permitted observer provider, except that: {revised at 76 FR 53833, August 30, 2011}

(A) Vessels are required to procure observer services directly from NMFS when NMFS has determined and given notification that the vessel must carry NMFS staff or an individual authorized by NMFS in lieu of an observer provided by a permitted observer provider.

(B) Vessels are required to procure observer services directly from NMFS and a permitted observer provider when NMFS has determined and given notification that the vessel must carry NMFS staff and/or individuals authorized by NMFS, in addition to an observer provided by a permitted observer provider.

(ii) [Reserved]

(4) Application to become an observer provider. Any observer provider holding a valid permit issued by the North Pacific observer program in 2010 can supply observer services to the west coast trawl fishery and will be issued a West Coast Groundfish Observer Program permit.

(5) Observer provider responsibilities.

(i) Provide qualified candidates to serve as observers. Observer providers must provide qualified candidates to serve as observers. To be qualified, a candidate must have:

(A) A Bachelor's degree or higher from an accredited college or university with a major in one of the natural sciences;

(B) Successfully completed a minimum of 30 semester hours or equivalent in applicable biological sciences with extensive use of dichotomous keys in at least one course;

(C) Successfully completed at least one undergraduate course each in math and statistics with a minimum of 5 semester hours total for both; and

(D) Computer skills that enable the candidate to work competently with standard database software and computer hardware.

(ii) Hiring an observer candidate

(A) The observer provider must provide the candidate a copy of NMFS-provided pamphlets, information and other literature describing observer duties, for example, the West Coast Groundfish Observer Program's sampling manual. Observer job information is available from the Observer Program Office's web site at *http://www.nwfsc.noaa.gov/ research/divisions/fram/observer/index.cfm*.

(B) Observer contracts. The observer provider must have a written contract or a written contract addendum signed by the observer and observer provider prior to the observer's deployment with the following clauses:

(1) That all the observer's in-season messages and catch reports required to be sent while deployed are delivered to the Observer Program Office as specified by written Observer Program instructions;

(2) That the observer inform the observer provider prior to the time of embarkation if he or she is experiencing any new mental illness or physical ailments or injury since submission of the physician's statement as required as a qualified observer candidate that would prevent him or her from performing their assigned duties; and

(3) That every observer completes a basic cardiopulmonary resuscitation/ first aid course prior to the end of the NMFS West Coast Groundfish Observer Training class.

(iii) Ensure that observers complete duties in a timely manner. An observer provider must ensure that observers employed by that observer provider do the following in a complete and timely manner:

(A) Submit to NMFS all data, logbooks and reports and biological samples as required under the observer program policy deadlines.

(B) Report for his or her scheduled debriefing and complete all debriefing responsibilities; and

(C) Return all sampling and safety gear to the Observer Program Office at the termination of their contract.

(D) Immediately report to the Observer Program Office and the NOAA OLE any refusal to board an assigned vessel.

(iv) Observers provided to vessel.

(A) Must have a valid West Coast Groundfish observer certification endorsement;

(B) Must not have informed the provider prior to the time of embarkation that he or she is experiencing a mental illness or a physical ailment or injury developed since submission of the physician's statement, as required in paragraph (h)(5)(xi)(B) of this section that would prevent him or her from performing his or her assigned duties; and

(C) Must have successfully completed all NMFS required training and briefing before deployment.

(v) Respond to industry requests for observers. An observer provider must provide an observer for deployment pursuant to the terms of the contractual relationship with the vessel to fulfill vessel requirements for observer coverage under paragraphs (h)(5)(xi)(D) of this section. An alternate observer must be supplied in each case where injury or illness prevents the observer from performing his or her duties or where the observer resigns prior to completion of his or her duties. If the observer provider is unable to respond to an industry request for observer coverage from a vessel for whom the provider is in a contractual relationship due to the lack of available observers by the estimated embarking time of the vessel, the provider must report it to NMFS at least 4 hours prior to the vessel's estimated embarking time.

(vi) Provide observer salaries and benefits. An observer provider must provide to its observer employees salaries and any other benefits and personnel services in accordance with the terms of each observer's contract.

(vii) Provide observer deployment logistics.

(A) An observer provider must ensure each of its observers under contract:

(1) Has an individually assigned mobile or cell phones, in working order, for all necessary communication. An observer provider may alternatively compensate observers for the use of the observer's personal cell phone or pager for communications made in support of, or necessary for, the observer's duties.

(2) Calls into the NMFS deployment hotline upon departing and arriving into port for each trip to leave the following information: observer name, phone number, vessel departing on, expected trip end date and time.

(3) Remains available to NOAA Office for Law Enforcement and the Observer Program until the conclusion of debriefing.

(4) Receives all necessary transportation, including arrangements and logistics, of observers to the initial location of deployment, to all subsequent vessel assignments during that deployment, and to the debriefing location when a deployment ends for any reason; and

(5) Receives lodging, per diem, and any other services necessary to observers assigned to fishing vessels.

(i) An observer under contract may be housed on a vessel to which he or she is assigned: Prior to their vessel's initial departure from port; for a period not to exceed twenty-four hours following the completion of an offload when the observer has duties and is scheduled to disembark; or for a period not to exceed twenty-four hours following the vessel's arrival in port when the observer is scheduled to disembark.

(ii) During all periods an observer is housed on a vessel, the observer provider must ensure that the vessel operator or at least one crew member is aboard.

(iii) Otherwise, each observer between vessels, while still under contract with a permitted observer provider, shall be provided with accommodations in accordance with the contract between the observer and the observer provider. If the observer provider is responsible for providing accommodations under the contract with the observer, the accommodations must be at a licensed hotel, motel, bed and breakfast, or other shoreside accommodations that has an assigned bed for each observer that no other person may be assigned to for the duration of that observer's stay. Additionally, no more than four beds may be in any room housing observers at accommodations meeting the requirements of this section.

(viii) Observer deployment limitations and workload.

(A) Not deploy an observer on the same vessel more than 90 calendar days in a 12-month period, unless otherwise authorized by NMFS.

(B) Not exceed observer deployment limitations and workload as outlined in paragraph (h)(1)(ii) of this section.

(ix) Verify vessel's safety decal. An observer provider must verify that a vessel has a valid USCG safety decal as required under paragraph (h)(2)(ii)(B) of this section before an observer may get underway aboard the vessel. One of the following acceptable means of verification must be used to verify the decal validity:

(A) An employee of the observer provider, including the observer, visually inspects the decal aboard the vessel and confirms that the decal is valid according to the decal date of issuance; or

(B) The observer provider receives a hard copy of the USCG documentation of the decal issuance from the vessel owner or operator.

(x) Maintain communications with observers. An observer provider must have an employee responsible for observer activities on call 24 hours a day to handle emergencies involving observers or problems concerning observer logistics, whenever observers are at sea, in transit, or in port awaiting vessel reassignment.

(xi) Maintain communications with the Observer Program Office. An observer provider must provide all of the following information by electronic transmission (e-mail), fax, or other method specified by NMFS.

(A) Observer training, briefing, and debriefing registration materials. This information must be submitted to the Observer Program Office at least 7 business days prior to the beginning of a scheduled West Coast Groundfish observer certification training or briefing session.

(1) Training registration materials consist of the following:

(i) Date of requested training;

(ii) A list of observer candidates that includes each candidate's full name (*i.e.,* first, middle and last names), date of birth, and gender;

(iii) A copy of each candidate's academic transcripts and resume;

(iv) A statement signed by the candidate under penalty of perjury which discloses the candidate's criminal convictions;

(v) Projected observer assignments. Prior to the observer's completion of the training or briefing session, the observer provider must submit to the Observer Program Office a statement of projected observer assignments that includes each observer's

name, current mailing address, e-mail address, phone numbers and port of embarkation (''home port''); and

(vi) Length of each observer's contract.

(2) Briefing registration materials consist of the following:

(i) Date and type of requested briefing session;

(ii) List of observers to attend the briefing session, that includes each observer's full name (first, middle, and last names);

(iii) Projected observer assignments. Prior to the observer's completion of the training or briefing session, the observer provider must submit to the Observer Program Office a statement of projected observer assignments that includes each observer's name, current mailing address, e-mail address, phone numbers and port of embarkation (''home port''); and

(iv) Length of each observer's contract.

(3) Debriefing. The West Coast Groundfish Observer Program will notify the observer provider which observers require debriefing and the specific time period the provider has to schedule a date, time, and location for debriefing. The observer provider must contact the West Coast Groundfish Observer program within 5 business days by telephone to schedule debriefings.

(i) Observer providers must immediately notify the observer program when observers end their contract earlier than anticipated.

(ii) [Reserved]

(B) Physical examination. A signed and dated statement from a licensed physician that he or she has physically examined an observer or observer candidate. The statement must confirm that, based on that physical examination, the observer or observer candidate does not have any health problems or conditions that would jeopardize that individual's safety or the safety of others while deployed, or prevent the observer or observer candidate from performing his or her duties satisfactorily. The statement must declare that, prior to the examination, the physician was made aware of the duties of the observer and the dangerous, remote, and rigorous nature of the work by reading the NMFSprepared information. The physician's statement must be submitted to the Observer Program Office prior to certification of an observer. The physical exam must have occurred during the 12 months prior to the observer's or observer candidate's deployment. The physician's statement will expire 12 months after the physical exam occurred. A new physical exam must be performed, and accompanying

statement submitted, prior to any deployment occurring after the expiration of the statement.

(C) Certificates of insurance. Copies of ''certificates of insurance'', that name the NMFS Observer Program leader as the ''certificate holder'', shall be submitted to the Observer Program Office by February 1 of each year. The certificates of insurance shall verify the following coverage provisions and state that the insurance company will notify the certificate holder if insurance coverage is changed or canceled.

(1) Maritime Liability to cover ''seamen's'' claims under the Merchant Marine Act (Jones Act) and General Maritime Law ($1 million minimum).

(2) Coverage under the U.S. Longshore and Harbor Workers' Compensation Act ($1 million minimum).

(3) States Worker's Compensation as required.

(4) Commercial General Liability.

(D) Observer provider contracts. If requested, observer providers must submit to the Observer Program Office a completed and unaltered copy of each type of signed and valid contract (including all attachments, appendices, addendums, and exhibits incorporated into the contract) between the observer provider and those entities requiring observer services under paragraph (h)(1)(i) of this section. Observer providers must also submit to the Observer Program Office upon request, a completed and unaltered copy of the current or most recent signed and valid contract (including all attachments, appendices, addendums, and exhibits incorporated into the contract and any agreements or policies with regard to observer compensation or salary levels) between the observer provider and the particular entity identified by the Observer Program or with specific observers. The copies must be submitted to the Observer Program Office via email, fax, or mail within 5 business days of the request. Signed and valid contracts include the contracts an observer provider has with:

(1) Vessels required to have observer coverage as specified at paragraph (h)(1)(i) of this section; and

(2) Observers.

(E) Change in observer provider management and contact information. An observer provider must submit to the Observer Program Office any change of management or contact information submitted on the provider's permit application under paragraph (h)(4) of this section within 30 days of the effective date of such change.

(F) Biological samples. The observer provider must ensure that biological samples are stored/handled properly prior to delivery/transport to NMFS.

(G) Observer status report. Each Tuesday, observer providers must provide NMFS with an updated list of contact information for all observers that includes the observer's name, mailing address, e-mail address, phone numbers, port of embarkation ("home port"), fishery deployed the previous week and whether or not the observer is "in service", indicating when the observer has requested leave and/or is not currently working for the provider.

(H) Providers must submit to NMFS, if requested, copies of any information developed and used by the observer providers distributed to vessels, such as informational pamphlets, payment notification, description of observer duties, etc.

(I) Other reports. Reports of the following must be submitted in writing to the West Coast Groundfish Observer Program Office by the observer provider via fax or e-mail address designated by the Observer Program Office within 24 hours after the observer provider becomes aware of the information:

(1) Any information regarding possible observer harassment;

(2) Any information regarding any action prohibited under §660.12(e); §660.112(a)(4); or §600.725(o), (t) and (u); {revised at 76 FR 53833, August 30, 2011}

(3) Any concerns about vessel safety or marine casualty under 46 CFR 4.05– 1(a)(1) through (7);

(4) Any observer illness or injury that prevents the observer from completing any of his or her duties described in the observer manual; and

(5) Any information, allegations or reports regarding observer conflict of interest or breach of the standards of behavior described in observer provider policy.

(xii) Replace lost or damaged gear. An observer provider must replace all lost or damaged gear and equipment issued by NMFS to an observer under contract to that provider. All replacements must be in accordance with requirements and procedures identified in writing by the Observer Program Office.

(xiii) Maintain confidentiality of information. An observer provider must ensure that all records on individual observer performance received from NMFS under the routine use provision of the Privacy Act or as otherwise required by law remain confidential and are not further released to anyone outside the employ of the observer provider company to whom the observer was contracted except with written permission of the observer.

(xiv) Limitations on conflict of interest. Observer providers:

(A) Must not have a direct financial interest, other than the provision of observer services, in the North Pacific or Pacific coast fishery managed under an FMP for

the waters off the coasts of Alaska, Washington, Oregon, and California, including, but not limited to:

(1) Any ownership, mortgage holder, or other secured interest in a vessel or shoreside processor facility involved in the catching, taking, harvesting or processing of fish,

(2) Any business involved with selling supplies or services to any vessel or shoreside processors participating in a fishery managed pursuant to an FMP in the waters off the coasts of Alaska, California, Oregon, and Washington, or

(3) Any business involved with purchasing raw or processed products from any vessel or shoreside processor participating in a fishery managed pursuant to an FMP in the waters off the coasts of Alaska, California, Oregon, and Washington.

(B) Must assign observers without regard to any preference by representatives of vessels other than when an observer will be deployed.

(C) Must not solicit or accept, directly or indirectly, any gratuity, gift, favor, entertainment, loan, or anything of monetary value except for compensation for providing observer services from anyone who conducts fishing or fish processing activities that are regulated by NMFS in the Pacific coast or North Pacific regions, or who has interests that may be substantially affected by the performance or non-performance of the official duties of observer providers.

(xv) Observer conduct and behavior. An observer provider must develop and maintain a policy addressing observer conduct and behavior for their employees that serve as observers.

(A) The policy shall address the following behavior and conduct regarding:

(1) Observer use of alcohol;

(2) Observer use, possession, or distribution of illegal drugs; and;

(3) Sexual contact with personnel of the vessel or processing facility to which the observer is assigned, or with any vessel or processing plant personnel who may be substantially affected by the performance or non-performance of the observer's official duties.

(B) An observer provider shall provide a copy of its conduct and behavior policy to each observer candidate and to the Observer Program by February 1 of each year.

(xvi) Refusal to deploy an observer. Observer providers may refuse to deploy an observer on a requesting vessel if the observer provider has determined that the requesting vessel

is inadequate or unsafe pursuant to those described at § 600.746 or U.S. Coast Guard and other applicable rules, regulations, statutes, or guidelines pertaining to safe operation of the vessel.

(6) Observer certification and responsibilities

(i) Applicability. Observer certification authorizes an individual to fulfill duties as specified in writing by the NMFS Observer Program Office while under the employ of a NMFS-permitted observer provider and according to certification requirements as designated under paragraph (h)(6)(iii) of this section.

(ii) Observer certification official. The Regional Administrator will designate a NMFS observer certification official who will make decisions for the Observer Program Office on whether to issue or deny observer certification.

(iii) Certification requirements

(A) Initial certification. NMFS may certify individuals who, in addition to any other relevant considerations:

(1) Are employed by an observer provider company permitted pursuant to § 660.140(h) at the time of the issuance of the certification;

(2) Have provided, through their observer provider:

(i) Information identified by NMFS at § 679.50 regarding an observer candidate's health and physical fitness for the job;

(ii) Meet all observer candidate education and health standards as specified in § 679.50; and

(iii) Have successfully completed NMFS-approved training as prescribed by the At-Sea Hake and/or West Coast Groundfish Observer Program. Successful completion of training by an observer applicant consists of meeting all attendance and conduct standards issued in writing at the start of training; meeting all performance standards issued in writing at the start of training for assignments, tests, and other evaluation tools; and completing all other training requirements established by the Observer Program.

(iv) Have not been decertified under paragraph (h)(6)(ix) of this section, or pursuant to § 679.50.

(B) [Reserved]

(iv) Denial of a certification. The NMFS observer certification official will issue a written determination denying observer certification if the candidate fails to successfully

complete training, or does not meet the qualifications for certification for any other relevant reason.

(v) Issuance of an observer certification. An observer certification may be issued upon determination by the observer certification official that the candidate has successfully met all requirements for certification as specified at paragraph (h)(6)(iii) of this section. The following endorsements must be obtained in addition to observer certification, in order for an observer to deploy.

(A) West Coast Groundfish Observer Program training certification endorsement. A training certification endorsement signifies the successful completion of the training course required to obtain observer certification. This endorsement expires when the observer has not been deployed and performed sampling duties as required by the Observer Program Office for a period of time, specified by the Observer Program, after his or her most recent debriefing. The Observer can renew the endorsement by successfully completing training once more.

(B) West Coast Groundfish Observer Program annual general endorsement. Each observer must obtain an annual general endorsement to their certification prior to his or her first deployment within any calendar year subsequent to a year in which a training certification endorsement is obtained. To obtain an annual general endorsement, an observer must successfully complete the annual briefing, as specified by the Observer Program. All briefing attendance, performance, and conduct standards required by the Observer Program must be met.

(C) West Coast Groundfish Observer Program deployment endorsement. Each observer who has completed an initial deployment after their certification or annual briefing must receive a deployment endorsement to their certification prior to any subsequent deployments for the remainder of that year. An observer may obtain a deployment endorsement by successfully completing all briefing requirements, when applicable. The type of briefing the observer must attend and successfully complete will be specified in writing by the Observer Program during the observer's most recent debriefing.

(vi) Maintaining the validity of an observer certification. After initial issuance, an observer must keep their certification valid by meeting all of the following requirements specified below:

(A) Successfully perform their assigned duties as described in the Observer Manual or other written instructions from the Observer Program Office including calling in to the NMFS deployment hotline upon departing and arriving in to port each trip to leave the following information: Observer name, phone number, vessel name departing on, date and time of departure and date and time of expected return.

(B) Accurately record their sampling data, write complete reports, and report accurately any observations of suspected violations of regulations relevant to conservation of marine resources or their environment.

(C) Not disclose collected data and observations made on board the vessel or in the processing facility to any person except the owner or operator of the observed vessel or an authorized officer or NMFS.

(D) Successfully complete NMFSapproved annual briefings as prescribed by the West Coast Groundfish Observer Program.

(E) Successful completion of briefing by an observer applicant consists of meeting all attendance and conduct standards issued in writing at the start of training; meeting all performance standards issued in writing at the start of training for assignments, tests, and other evaluation tools; and completing all other briefing requirements established by the Observer Program.

(F) Hold current basic cardiopulmonary resuscitation/first aid certification as per American Red Cross Standards.

(G) Successfully meet all expectations in all debriefings including reporting for assigned debriefings.

(H) Submit all data and information required by the Observer Program within the program's stated guidelines.

(I) Meet the minimum annual deployment period of 3 months at least once every 12 months.

(vii) Limitations on conflict of interest. Observers:

(A) Must not have a direct financial interest, other than the provision of observer services, in a fishery managed pursuant to an FMP for the waters off the coast of Alaska, or in a Pacific Coast fishery managed by either the state or Federal Governments in waters off Washington, Oregon, or California, including but not limited to:

(1) Any ownership, mortgage holder, or other secured interest in a vessel, shore-based or floating stationary processor facility involved in the catching, taking, harvesting or processing of fish,

(2) Any business involved with selling supplies or services to any vessel, shore-based or floating stationary processing facility; or

(3) Any business involved with purchasing raw or processed products from any vessel, shore-based or floating stationary processing facilities.

(B) Must not solicit or accept, directly or indirectly, any gratuity, gift, favor, entertainment, loan, or anything of monetary value from anyone who either conducts activities that are regulated by NMFS in the Pacific coast or North

Pacific regions or has interests that may be substantially affected by the performance or nonperformance of the observers' official duties.

(C) May not serve as observers on any vessel or at any shore-based owned or operated by a person who employed the observer in the last two years.

(D) May not solicit or accept employment as a crew member or an employee of a vessel or shore-based processor while employed by an observer provider.

(E) Provisions for remuneration of observers under this section do not constitute a conflict of interest.

(viii) Standards of behavior. Observers must:

(A) Perform their duties as described in the Observer Manual or other written instructions from the Observer Program Office.

(B) Immediately report to the Observer Program Office and the NOAA OLE any time they refuse to board a vessel.

(C) Accurately record their sampling data, write complete reports, and report accurately any observations of suspected violations of regulations relevant to the conservation of marine resources of their environment.

(D) Not disclose collected data and observations made on board the vessel to any person except the owner or operator of the observed vessel, an authorized officer, or NMFS.

(ix) Suspension and decertification

(A) Suspension and decertification review official. The Regional Administrator (or a designee) will designate an observer suspension and decertification review official(s), who will have the authority to review observer certifications and issue initial administrative determinations of observer certification suspension and/or decertification.

(B) Causes for suspension or decertification. The suspension and decertification official may initiate suspension or decertification proceedings against an observer:

(1) When it is alleged that the observer has not met applicable standards, including any of the following:

(i) Failed to satisfactorily perform duties as described or directed by the observer program; or

(ii) Failed to abide by the standards of conduct for observers, including conflicts of interest;

(2) Upon conviction of a crime or upon entry of a civil judgment for:

(i) Commission of fraud or other violation in connection with obtaining or attempting to obtain certification, or in performing the duties as specified in writing by the NMFS Observer Program;

(ii) Commission of embezzlement, theft, forgery, bribery, falsification or destruction of records, making false statements, or receiving stolen property;

(iii) Commission of any other offense indicating a lack of integrity or honesty that seriously and directly affects the fitness of observers.

(C) Issuance of initial administrative determination. Upon determination that suspension or decertification is warranted, the suspension/ decertification official will issue a written IAD to the observer via certified mail at the observer's most current address provided to NMFS. The IAD will identify whether a certification is suspended or revoked and will identify the specific reasons for the action taken. Decertification is effective 30 calendar days after the date on the IAD, unless there is an appeal.

(D) Appeals. A certified observer who receives an IAD that suspends or revokes his or her observer certification may appeal the determination within 30 calendar days after the date on the IAD to the Office of Administrative Appeals pursuant to § 679.43.

(i) Catch monitor requirements for IFQ first receivers. {added at 75 FR 78344, 12/15/2010}

(1) Catch monitor coverage requirements. A catch monitor is required be present at each IFQ first receiver whenever an IFQ landing is received, unless the first receiver has been granted a written waiver from the catch monitor requirements by NMFS.

(2) Procurement of catch monitor services. Owners or managers of each IFQ first receiver must arrange for catch monitor services from a certified catch monitor provider prior to accepting IFQ landings.

(3) Catch monitor safety.

(i) Each IFQ first receiver must adhere to all applicable rules, regulations, or statutes pertaining to safe operation and maintenance of a processing and/or receiving facility.

(ii) The working hours of each individual catch monitor will be limited as follows:

(A) An individual catch monitor shall not be required or permitted to work more than 16 hours per calendar day, with maximum of 14 hours being work other than the summary and submission of catch monitor data.

Radio Communications

The radios that you will encounter most often are VHF-FM (Very High Frequency Modulation), used for short-range vessel-to-vessel and vessel-to-shore communication, and HF-SSB (High Frequency-Single Side Band), used for communication when the stations are out of VHF range with each other. Both types offer certain special advantages, and each requires a specific operating procedure. The use of radio communication equipment requires a licensed operator. If your vessel has given you permission to use the radio, you must follow the FCC rules for calling and speaking on the type of radio (VHF or SSB) you use. Ask first how to operate the radio and use these pages as a guide for calling. Be aware that obstructing others' transmissions with your call (by conversing for too long), using profanities or making false distress calls can cost the permit holder and/or you a heavy fine and/or prison sentence.

VHF-FM Radios

In the United States, the VHF Band is broken up into 71 channels, with a frequency range of from 156.000 to 163.000 MHz, including six WX (Weather) channels. By law, all operating VHF stations are required to have at least three of these channels: channel 6, channel 16, and at least one other working channel.

Channel 6 (156.300 MHz) is the Intership Safety Channel, used for intership safety purposes, search-and rescue (SAR) communications with ships and aircraft of the U.S. Coast Guard, and vessel movement reporting within ports and inland waterways. This channel must not be used for non-safety communications.

Channel 16 (156.800 MHz) is the International Distress, Safety, and Calling Channel (Intership and Ship-to-Coast). This channel must be monitored at all times the station is in operation (except when actually communicating on another channel). This channel is also monitored by the U.S. Coast Guard, Public Coastal Stations, and many Limited Coastal Stations. Calls to vessels are normally initiated on this channel. Then, except in an emergency, you must switch to a working channel. It is against FCC regulations to conduct business on this channel. In addition, vessels calling must use their assigned call sign at the beginning and end of each transmission.

Channel 22A (157.100 MHz) is the U.S. Coast Guard Liaison Channel. This channel is used for communications with U.S. Coast Guard ships, aircraft, and coastal stations after first establishing contact on channel 16. Navigational warnings and, where not available on WX channels, Marine Weather forecasts are also broadcast on this frequency.

Channels 24. 25. 26. 27 and 28 (also 84. 85. 86 and 87) are the Public Correspondence channels (ship-to-coast). These are available to all vessels to communicate with Public Coastal stations (Marine Operator).

Channels 26 and 28 are the primary public correspondence channels.

Channels 1. 3. 5. 12. 13. 14. 15. 17. 65. 66. 73. 74. 77. 81. 82 and 83 are channels with special designations (port traffic communications, U.S. government

communications, locks and bridges, environmental, etc.), and their use close to shore or to ports should be minimized..

Channels 7. 8. 9. 10. 11. 18. 19. 67. 68. 69. 70. 71. 72. 78. 79. 80 and 88 are commercial and non-commercial working channels that are available for conducting business. The abbreviated format (no call signs) is acceptable on these frequencies. It should be noted that some of these channels may be locally restricted (off the Washington Coast, for example, channel 11 is Tofino Coast Guard Traffic Control for the entry into Juan de Fuca Strait, used for reporting ship locations), in which case their use for business should be avoided.

HF-SSB Radios

To communicate over distances of beyond twenty miles, you will need to use satellite communication or a medium to high frequency radiotelephone referred to as Single Side Band (SSB) radio. The signal is poorer in quality than VHF and susceptible to slight atmospheric shifts. Lower frequencies are used for medium distances and higher frequencies for greater distances. The general rule for single sideband frequency selection is: multiply the frequency in MHz by 100 to obtain the approximate coverage distance in miles. At night however, the ranges of SSB radio wave travel are from 2-3 times greater. Therefore, use a lower frequency at night to cover the same distance.

All ship SSB radiotelephones must be capable of operating on 4125 kHz, the international distress and calling frequency, and at least 2 other frequencies. Numerous channels are available for your use; which ones are available varies from place to place. However, channel 2670 kHz is only used for communicating with the Coast Guard and should not be used for other purposes.

When using SSB radiotelephone, you must observe radio silence on channel 4125 kHz, the emergency channel, for 3 minutes immediately after the hour and the half hour. The purpose of radio silence on the emergency hailing channel is to clear the airwave for weak or distant distress signals. No radio silence is used on the VHF emergency channel: channel 16.

Radio Procedure

In as much as the airwaves are in the public domain, it is the responsibility of the radio station operator to conduct business according to established guidelines and procedures. While on the air, the operator should follow the following format outline:

1. Listen before beginning transmission in order to ensure that you are not interfering with other stations or with emergency radio traffic.
2. Identify your station when calling. On the SSB, a calling station must limit the duration of the hail to not more than 30 seconds. If there is no reply, the hail may be repeated at 2 minute intervals up to a maximum of three times, at which time the calling station must sign off and wait a minimum of 15 minutes before making another attempt. This requirement does not apply in emergency situations.
3. Keep transmissions short and concise, giving the other station a chance to respond, ask questions, or reconfirm an unclear message. A long, complicated message can best be effected in short segments with breaks in between to ensure that the receiving station has copied each portion of the message correctly.

4. Follow correct radio procedure while on the air. The phonetic alphabet should be learned and used spelling unclear words with an extemporaneous phonetic alphabet can lead to misunderstood messages. You should also know and use the radio "punctuation" words ("over", clear", "out", "roger", "words twice", "say again", "standing by", and "break"). Since most radio communication is only one way at a time, these words can be invaluable for signaling your intentions to the receiving station. Make sure to speak directly into the microphone; speaking loudly, slowly, and distinctly-but not shouting-can significantly improve the legibility of radio broadcasts. The use of profanity on the public airwaves is strictly forbidden.

5. Upon completing a transmission, you must sign off by identifying your station and using the words "clear" or "out" (or, if you expect to soon resume contact with the same station, by using the phrase "standing by").

Radios are different from telephones in that they cannot transmit and receive simultaneously. Therefore when you have temporarily finished talking and are ready to listen, say "over," and release the button on your microphone. When the other party is ready to listen they will say "over." At the end of your entire message, say "out" rather than "over." Keep in mind that people on other ships can overhear your conversation, so watch what you say.

Sounds are easily garbled on marine radios so the phonetic alphabet is used when sailors want to spell something. Here are the words that the Coast Guard will recognize as letters:

A - alpha	I - indigo	Q - quebec	Y- yankee
B - bravo	J - juliet	R - romeo	Z - zulu
C - charlie	K - kilo (keeloes)	S - sierra	
D - delta	L - lima (Leema)	T - tango	
E - echo	M - mike	U - uniform	
F - foxtrot	N - november	V - victor	
G - gulf	O - oscar	W - whiskey	
H - hotel	P - papa	X - x-ray	

Every ship and all Coast Guard stations continually listen to the emergency frequencies. Therefore when you want to talk to someone, call on an emergency frequency. As soon as you contact them, arrange to switch to another channel. It is illegal, impolite, unfair, and dangerous to talk on emergency channels. Sometimes atmospheric conditions are such that the emergency frequencies are the only ones that work. At those times you simply cannot communicate via radio except to report emergencies.

Emergency frequencies are:

- FM Channel 16, international distress
- FM Channel 13, for ships to use to avoid collisions. You can contact other ships on 13, but not Coast Guard shore stations.
- AM 4125, international distress (Almost certainly as an observer you will only be using FM frequencies.)
- When you initially contact another station make sure you state what channel you are broadcasting on, since all ships and stations constantly listen to several.
- Speak in normal tones, using normal conversational pauses and emphasis.
- Ensure that your messages are brief and businesslike. No chatter.
- When trying to establish communications repeat the other station's name, and your name, at least twice.

- A typical message may be as follows:

  You: Coast Guard Station San Francisco Coast Guard Station San Francisco; this is the fishing vessel Starry Flounder, Whiskey Tango Zulu four, one, nine, zero; this is the fishing vessel Starry Flounder, Whiskey Tango Zulu four, one, nine, zero on channel sixteen, over.

  C.G.: Fishing vessel Starry Flounder this is Coast Guard Station San Francisco shift and answer on channel eleven, out.

  You: Coast Guard Station San Francisco Coast Guard Station San Francisco this is the Starry Flounder on channel eleven, over.

  C.G.: Fishing vessel Starry Flounder, this is Coast Guard Station Kodiak send your traffic, over.

  You: San Francisco this is the Starry Flounder, I am an observer talking for the captain. A crewman has a badly crushed arm and needs hospitalization. Can you evacuate the crewman? Over. "

  C.G.: Vessel Starry Flounder, this is San Francisco. Affirmative. What is your current position? Over.

You: San Francisco this is the Starry Flounder. Position is fifty-five degrees fifty minutes north, 157 degrees, twenty-four minutes west, over..A-55

NATIONAL INVENTORY STATUS:

U.S. INVENTORY (TSCA): Listed on inventory.

TSCA 12(b) EXPORT NOTIFICATION: Not listed.

CANADA INVENTORY (DSL/NDSL): Not determined.

SECTION 16 OTHER INFORMATION

©Copyright 1984-2003 MDL Information Systems, Inc. All rights reserved.

MATHESON TRI-GAS, INC. MAKES NO EXPRESS OR IMPLIED WARRANTIES, GUARANTEES OR REPRESENTATIONS REGARDING THE PRODUCT OR THE INFORMATION HEREIN, INCLUDING BUT NOT LIMITED TO ANY IMPLIED WARRANTY OF MERCHANTABILITY OR FITNESS FOR USE. MATHESON TRI-GAS, INC. SHALL NOT BE LIABLE FOR ANY PERSONAL INJURY, PROPERTY OR OTHER DAMAGES OF ANY NATURE, WHETHER COMPENSATORY, CONSEQUENTIAL, EXEMPLARY, OR OTHERWISE, RESULTING FROM ANY PUBLICATION, USE OR RELIANCE UPON THE INFORMATION HEREIN.

Processors

California		
Murphys Sunnybrae	Arcata	(707) 822-1157
Murphys Glendale	Arcata	(707) 822-2271
Unknown	Arcata	(707) 826-8670
Shin Fish	Artesia	(562) 402-4747
Central Coast Seafood	Atascadero	(805) 772-1280
Armstrongs Fish Market & Seafood	Avalon	(310) 510-0113
Petes Pierside Cafe	Avila Beach	(805) 595-7627
Olde Port Fisheries Inc	Avila Beach	(805) 595-9456
Del Mar Seafoods Inc	Avila Beach	(805) 595-9456
Bj Enterprizes	Avila Beach	(805) 929-5757
The Tides	Bodega Bay	(707) 875-3560
The Tides Wharf	Bodega Bay	(707) 875-2777
Lucas Wharf Inc	Bodega Bay	(707) 875-3571
Paisano Bros	Bodega Bay	(707) 875-3576
Fresh Fish	Bodega Bay	(707) 875-9633
Drews Fish	Bolinas	(415) 868-1320
Moores Seafood Inc	Camarillo	(805) 384-9277
Pellys Fish Market And Deli	Carlsbad	(760) 431-8454
Sea Harvest	Carmel	(408) 626-3626
Pacific Fish & Crab Market	Carson	(310) 518-4042
Mr Lee Bbq House	Cerritos	(562) 809-1339
Fresh Daily Fish Co	Costa Mesa	
Pacific Choice Seafood Co	Crescent City	(707) 464-5558
Caito Fisheries Inc	Crescent City	(707) 464-9483
Crescent City Hook & Line Group	Crescent City	(707) 465-6857
Alber Seafoods Inc	Crescent City	(707) 464-8122
Tin Tin Oriental Market	Cupertino	(408) 255-7804
West Basin Trap & Lobster	Dana Point	(760) 868-5713
Morning Star Fisheries	El Granada	(415) 728-3729
Exclusive Freshness	El Granada	(415) 728-7321
Three Captains Sea Products	El Granada	(650) 726-3111
Three Captains Sea Products Inc	El Granada	(650) 726-3111
Pemberton Fish	El Granada	(650) 740-0615
Pacific Choice Seafood Co	Eureka	(707) 442-2981
Mr Fish Seafood	Eureka	(707) 443-2661
Caito Fisheries Inc	Eureka	(707) 443-0550
Murphys Markets Inc	Eureka	(707) 822-7665
Eureka Co-op	Eureka	(707) 443-6027
Caito Fisheries Inc	Fort Bragg	(707) 964-6368
Bassler Fisheries	Fort Bragg	(707) 964-0597
Empress Seafood Llc	Fort Bragg	(707) 964-3557
North Coast Fishing Adventures Inc	Fort Bragg	(707) 964-3000
The Fish Market	Fort Bragg	(707) 964-1600
Ocean Fresh Seafood Products Jv	Fort Bragg	(707) 964-1394
Ocean Fresh Seafood Products Jv	Fort Bragg	(707) 964-1652
P Seafood	Fort Bragg	(415) 203-5155
Voyatzis Fish Company	Fountain Valley	(949) 673-1833
Central Fish Company	Fresno	(209) 237-2049
Pacific Fresh Seafood Company	Fresno	(209) 264-3474
Empress Seafood Llc	Ft Bragg	(707) 964-3557
Crystal Food Inc	Fullerton	(714) 447-3610
Princeton Seafood Company	Half Moon Bay	(650) 726-2722
Fitz Buskirk Inc	Half Moon Bay	(650) 726-6953
Ma Seafood	Hawaiian Gardens	(562) 421-1698
C J Seafood	Huntington Beach	(714) 960-7733
Yale Fish Company	La Crescenta	(213) 324-9577
Fukushima	Lemon Grove	(619) 461-2443
Del Mar Seafoods Inc	Long Beach	(562) 628-1800
Lb Seafood	Long Beach	(562) 426-8353
Pacific Fresh Fish Company Inc	Los Angeles	(213) 623-6220
American Fish And Seafood Company	Los Angeles	(213) 612-0350
Los Angeles Fish	Los Angeles	(213) 612-0350
Showa Marine Inc	Los Angeles	(213) 627-4091
Dy Fish Trading Co	Los Angeles	(213) 447-1622
Capn Zachs Crabhouse Inc	Mckinleyville	(707) 839-9050
T & L Trading Inc	Montebello	(323) 887-8838
Monterey Fish Company Inc	Monterey	(831) 375-3511
Royal Seafoods Inc	Monterey	(831) 373-7920
Deyerle Brothers Seafood Inc	Monterey	(831) 632-2574
	Monterey	(831) 372-2636
Central Coast Seafoods	Morro Bay	(805) 462-3474
Bayshores Fish Company	Morro Bay	(805) 772-8411
Giovannis Wholesale Fish	Morro Bay	(805) 772-1276
Tognazzinis Dockside Restaurant	Morro Bay	(805) 772-8100
Bay Fresh	Moss Landing	(831) 633-5160
Bay Fresh Seafood	Moss Landing	(831) 633-5160
Monterey Fish Company Inc	Moss Landing	(831) 633-4808
Phils Fish Market & Eatery	Moss Landing	(831) 633-2152
Sea Harvest	Moss Landing	(831) 633-6300
Sea Harvest	Moss Landing	(831) 632-2574
Solomon Live Fish	Moss Landing	(831) 632-0304
Del Mar Seafoods Inc	Moss Landing	(831) 753-5100

Del Mar Seafoods Inc	Moss Landing	(831) 753-5100
Bay Fresh Seafoods	Moss Landing	(408) 633-5160
Beticia	Moss Landing	(831) 671-9261
Newport Dory Fleet Co Op	Newport Beach	(714) 754-0915
Woods Ocean Products	Oak View	(805) 708-0483
New Sang Chong Market	Oakland	(510) 451-2018
Yet Sun Market	Oakland	(510) 451-3625
Nor Cal Seafood Inc	Oakland	(510) 532-7823
New Tins Market	Oakland	(510) 832-6256
Ken S Sio Inc	Oakland	(510) 390-2549
Ma Seafood	Oakland	(510) 865-3381
Lucky Seafood Market	Oakland	(510) 436-6068
Lucky Seafood Mkt 2	Oakland	(510) 436-6068
Juan Vazquez Company	Orange	(714) 997-9061
Fishermans House	Oxnard	(805) 984-3443
Del Mar Seafoods Inc	Oxnard	(831) 753-5100
Hc Seafoods Inc	Oxnard	(805) 382-8173
Sunrise Ii	Oxnard	(805) 231-0205
Fisherman Fresh Seafood	Oxnard	(805) 701-0018
Cactus Cove	Palm Desert	(760) 340-1418
Pacific West Seafood Co Inc	Petaluma	(707) 763-2917
Lemons Philo Mkt Inc	Philo	(707) 895-3552
Pemberton Fish	Pillar Point Harbor	(650) 740-0615
Stacey Joanne	Pillar Point Harbor	(650) 740-0615
Monterey Fish Company Inc	Port Hueneme	(805) 488-1151
Ocean Fresh Seafood Products Jv	Pt Arena	(707) 882-1662
Captain Kidds Fish Market	Redondo Beach	(310) 372-7703
Kingfisher Trading Company Inc	S El Monte	(626) 448-9222
Ocean Harvestors Company	S El Monte	(626) 705-8198
Ly North Star Seafood Inc	S El Monte	(626) 582-8188
Pacific Fresh Sea Food Company	Sacramento	(916) 419-5500
Sachiko Fish	Sacramento	(916) 429-6604
Monterey Fish Company Inc	Salinas	(831) 775-0522
Monterey Fish Company Inc	Salinas	(831) 769-9155
Franks Fish Market	Salinas	(408) 422-0879
Marina Fish & Poultry	Sam Leandro	(510) 357-0421
Sportsmens Seafoods Inc	San Diego	(619) 224-3551
Catalina Offshore Products	San Diego	(619) 297-9797
Chesapeake Fish Company Inc	San Diego	(619) 238-0526
Mrs Kellys Inc/dba Pt Loma Seafoods	San Diego	(619) 223-1109
Andys Fish	San Diego	(619) 417-5097
Madruga Fish	San Diego	(619) 225-9247
Wild West	San Diego	(858) 272-6958
All Ways Fishing	San Diego	(619) 840-7375

Johnnys	San Diego	(619) 218-8242
Caito Fisheries Inc	San Francisco	(415) 441-2121
Osprey Seafood Of California Inc	San Francisco	(415) 291-0156
Pacific San Francisco	San Francisco	(415) 474-0150
23rd Irving Supermarket Inc	San Francisco	(415) 682-0926
Wah Lian Supermarket Inc	San Francisco	(415) 681-3982
C & L Sea Food Wholesale Inc	San Francisco	(415) 816-1472
New Lun Wah Company Inc	San Francisco	(415) 986-0756
Costarella Seafoods	San Francisco	(415) 674-0175
W F Alber Inc	San Francisco	(415) 292-1640
Wah Lian Super Market	San Francisco	(415) 665-7598
Jamie Supermarket	San Francisco	(415) 956-5398
New Sang Sang Market Inc	San Francisco	(415) 433-0403
P & T Flannery Seafoods Inc	San Francisco	(415) 346-1303
Robalo	San Francisco	(415) 982-7903
New Luen Sing Fish Market Inc	San Francisco	(415) 566-6299
Royal Hawaiian Seafood	San Francisco	(415) 824-1177
Next Seafood Company Inc	San Francisco	(415) 929-1803
San Pedro Fish Market & Restaurant	San Pedro	(310) 832-4251
Np Seafood	San Pedro	(310) 832-4119
Mus Seafood Company	Santa Barbara	(805) 963-1266
Santa Barbara Fishermens Market	Santa Barbara	(805) 965-9564
Far West Marine Seafood	Santa Cruz	(408) 287-5524
Stagnaro Bros Seafood Inc	Santa Cruz	(408) 423-1188
Stagnaro Bros Seafood Inc	Santa Cruz	(408) 423-1188
	Santa Cruz	(831) 234-8571
Hans Fish	Santa Cruz	(831) 588-7338
North Coast Fisheries Inc	Santa Rosa	(707) 579-0679
Young Brothers Fish	Scotts Valley	(831) 818-4428
The Cove Restaurant	Shelter Cove	(707) 986-1197
Del Mar Seafoods Inc	Terminal Island	(831) 753-5100
Seascape Restaurant	Trinidad	(707) 677-0211
Murphys Trinidad	Trinidad	(707) 677-3643
Katys Smokehouse	Trinidad	(707) 677-0151
Del Mar Seafoods	Ventura	(831) 763-3000
Pierpont Seafood	Ventura	(805) 658-2069
American Fish - Sacramento	W Sacramento	(213) 612-0350
Monterey Fish Company Inc	Watsonville	(831) 761-5579
Del Mar Seafoods Inc	Watsonville	(831) 763-3000
Del Mar Seafoods Inc	Watsonville	(831) 753-5100
Marios Restaurant & Bar	Whitethorn	(707) 986-1401

Oregon		
Morlock, Randy Morlock	Aloha	(503) 310-2655
Allen, Benji	Astoria	(503) 244-3010
American Canadian Fisheries	Astoria	(360) 398-1117
Astoria Holdings Inc	Astoria	(503) 338-1288
Astoria Pacific Seafoods	Astoria	(503) 325-3156
Astoria Seafoods Llc	Astoria	(503) 741-7264
Bornstein Seafoods Of Oregon	Astoria	(503) 325-6164
Bruski's Dock	Astoria	(503) 338-8072
Custom Freezers Llc	Astoria	(503) 325-3419
Da Yang Seafoods Inc	Astoria	(425) 971-6596
Evans, Randall C	Astoria	(503) 338-8405
Fish Landing Llc	Astoria	(503) 325-1067
Fishhawk Fisheries	Astoria	(503) 325-5252
Ocean Crest Seafoods Inc	Astoria	(253) 861-3273
Tarabochia, Brian	Astoria	(503) 325-8516
Uniontown Fish Market	Astoria	(503) 325-9592
West Bay Marketing	Astoria	(503) 325-6636
Pacific Oyster Co	Bay City	(503) 377-2330
Ihander, Kirk	Bend	(541) 390-9516
Angler Seafood	Brookings	(541) 469-5900
Caito Fisheries Inc	Brookings	(541) 469-7628
Johns Fresh Seafood	Brookings	(541) 469-7671
Little J Live Crab	Brookings	(541) 469-6934
Pacific Choice Seafoods	Brookings	(541) 412-7072
Pratco	Brookings	(541) 469-4166
Sio Inc	Brookings	(510) 912-4960
Wild Billl Fisheries	Brookings	(541) 469-3109
Ecola Seafoods Inc	Cannon Beach	(503) 436-9130
Keller, William M	Cannon Beach	(503) 436-0248
Supreme Seafood Co	Cave Junction	(541) 592-4987
Bandon Pacific Inc	Charleston	(541) 888-9626
Chucks Seafoods Inc	Charleston	(541) 888-5525
Fishermens Wharf	Charleston	(541) 888-8862
Hallmark Fisheries	Charleston	(541) 888-3253
K Lyn Fisheries	Charleston	(541) 888-0267
Noyes, Mary C	Charleston	(541) 888-3122
Seahawk Seafood	Charleston	(541) 888-6645
Starvin Marvin's Seafood	Charleston	(541) 888-5808
Pacific Seafood Co Inc	Clackamas	(503) 657-1101
Klam King Clams Llc	Coos Bay	(541) 266-7707
Oregon Brand Seafood Llc	Coos Bay	(541) 888-1748
Penningtons Crab Co	Coos Bay	(541) 888-9018
Young Shin Fisheries Corp	Coquille	(541) 396-6979
Scott's Smokehouse	Corbett	(503) 667-4836
Seals, Carroll	Cottage Grove	(541) 942-5048
Tucker Industries Inc	Cottage Grove	(541) 942-6465

Jim's Seafood	Depoe Bay	(541) 994-6276
Neptunes Choice Llc	Depoe Bay	(541) 765-4000
Ocean Brite Seafood	Depoe Bay	(541) 270-7714
Henry H Pelfrey	Fairview	(503) 661-5093
Almendinger, Gary	Florence	(541) 902-1922
F/v Lassie	Florence	(541) 997-2664
International C Food Marketing	Florence	(541) 997-7978
Krab Kettle Fisheries Inc	Florence	(541) 997-8996
Weber's Fish Market	Florence	(541) 997-8886
Bay Ocean Seafood Co	Garibaldi	(503) 322-9629
Brothers Three Fisheries Inc	Garibaldi	(503) 791-8636
Deep Water Seafoods Llc	Garibaldi	(503) 755-9122
Dougs Diving, Doug Alm Dba	Garibaldi	(503) 322-2200
Network Fisheries	Garibaldi	(503) 791-0227
Oregon Gourmet Crab	Garibaldi	(503) 322-2544
Tillamook Bay Boathouse Llc	Garibaldi	(503) 322-3600
Nor-cal Seafoods Inc	Gold Beach	(541) 247-0773
Rogue King Seafood	Gold Beach	(541) 247-9494
Point Adams Packing Co	Hammond	(503) 861-2226
Chetco Seafood Co	Harbor	(541) 469-9251
Dick & Casey's Gourmet Seafood	Harbor	(541) 469-9494
Fox, Bingham	Harbor	(541) 661-4774
Great Amer Smkhse & Seafood	Harbor	(541) 469-6903
North Coast Fisheries Inc	Harbor	(707) 579-0679
Lawler, David	Hillsboro	(503) 440-3061
Barnacle Bills Seafood	Lincoln City	(541) 994-3022
Bills Seafood, Ii	Lincoln City	(541) 994-8110
Granville Fisheries Inc	Logsden	(541) 444-2460
Wild Planet	Mckinleyville	(707) 839-3170
Sausage Kitchen Inc	Milwaukie	(503) 656-9766
Adams, Charles	Newport	(541) 574-7863
Bay Street Crab Company	Newport	(541) 752-1822
Bornstein's	Newport	(541) 265-3201
Carvalho Fisheries Inc	Newport	(707) 839-3270
Caught In Oregon	Newport	(541) 961-8333
Codys Sea To You Seafoods	Newport	(541) 574-0284
Eder Fish Company	Newport	(541) 265-6650
F/v Judy, Robert Kemp, Ii	Newport	(541) 270-3752
Local Ocean Seafoods Inc	Newport	(541) 574-7959
Newell Seafoods	Newport	(541) 336-5615
Ocean Beauty Seafoods Inc Nwf	Newport	(503) 325-0656
Pacific Shrimp Company	Newport	(541) 265-4215
Pfister, Tom	Newport	(541) 265-9143
Robinson (R And S Seafood), Jim	Newport	(541) 961-1946
Roles, Dallas	Newport	(541) 270-1482
Sawyer's Landing	Newport	(541) 265-3907
Trident Seafoods Corp	Newport	(541) 265-7279
Yaquina Bay Fruit Processors	Newport	(541) 867-3314
Seafood Services Inc	North Bend	(541) 756-5139
Superior Seafood	North Bend	(541) 267-4423

Tony's Smoke House & Cannery Inc	Oregon City	(503) 656-7512
Pastime Fisheries	Otis	(541) 994-3440
Sea Star Enterprise	Otter Rock	(541) 765-2111
Cape Kiwanda Rv Park	Pacific City	(541) 921-0281
Sea Q Fish Ltd	Pacific City	(503) 965-6352
D S Seafoods	Port Orford	(541) 332-2245
Oregon Bait Co	Port Orford	(541) 332-0848
Happy Crab Seafoods Inc	Portland	(503) 285-7154
Hongland Market	Portland	(503) 252-3000
Jessica Dressel Llc	Portland	(503) 866-8082
O M Seafood Co	Portland	(503) 788-1984
Ocean Beauty Seafoods Inc	Portland	(503) 224-1611
Cowlitz River Smelt Co	Rainier	(360) 273-7354
George And Barker Fish Co	Redmond	(503) 741-0240
Jetty Fishery Llc	Rockaway	(503) 368-5746
Coastwide Seafood	Salem	(503) 947-6178
Mikes Custom Seafood	Salem	(503) 588-0302
Murtle Bee Tuna Llc	Salem	(503) 302-8431
Native Fish	Seal Rock	(541) 270-7889
Cox, Paul & Ilene	South Beach	(541) 961-3939
Donald Snow DBA F/V Summer Place	South Beach	(541) 867-7419
Lighthse Deli/fish Co, James Ive	South Beach	(541) 867-6800
Newport Bay Fish Co	South Beach	(541) 270-8023
Reinholdt Fishing Ent	St Helens	(503) 397-3369
Gilson Marine Farms Netarts Seafood Company	Tillamook Tillamook	(503) 842-2955 (503) 842-3698
Tillamook Bait Company	Tillamook	(503) 842-5031
Aue, Robert	Toledo	(541) 336-8107
Signature Salmon Llc	Tualatin	(503) 638-2943
Barto, James J	Veneta	(541) 935-3106
Cold Creek	Waldport	(541) 563-2146
Leland Arce Dba Seafood	Waldport	(541) 563-2835
Paulson, Keith	Waldport	(541) 563-4656
Waldport Seafood Company Llc	Waldport	(541) 563-4107
Heuker Brothers Inc	Warrendale	(541) 374-8255
Jessie's Ilwaco Fish Co	Warrenton	(360) 642-3773
Oregon Ocean Seafoods	Warrenton	(503) 861-1434
Pacific Coast Seafoods Company	Warrenton	(503) 861-2201
Sliders Select Seafoods	Warrenton	(503) 791-4762
Griff's Bayside Rest And Seafood	Winchester Bay	(541) 271-2512
Sloan's Wharf	Winchester Bay	(541) 271-1331
Sportsmen's Cannery & Smokehouse	Winchester Bay	(541) 271-3293

Washington		
Arrowac	Bellingham	(360) 676-1606
Bcs (Fish House)	Bellingham	(360) 733-1640
Bornstein Seafoods	Bellingham	(360) 734-7990
Dakota Fisheries	Blaine	(360) 332-4131
K-c Fish Co.	Blaine	(360) 332-5121
Boundary Fish Co.	Blaine	(360) 332-6715
Jessie's	Ilwaco	(360) 642-3362
High Tide	La Push	(360) 374-9494
High Tide	Neah Bay	(360) 645-2016
High Tide	Port Angeles	(360) 452-8488
Besecker, Inc.	Seattle	(206) 232-5040
South Bend Packer	South Bend	(360) 875-6570
D & M Live	Westport	(360) 268-3919
Washington Crab	Westport	(360) 268-9234
Merino Seafood	Westport	(360) 268-9286
Washington Crab	Westport	(360) 268-9410

Loran Information: LORAN Conversion Program

Background

LORAN positions are determined through the triangulation of signals sent out by LORAN stations. Two LORAN numbers, each originating at a different station, must be recorded for each location. These numbers can be converted to Lat/Long positions.

In order to do the conversion, the specific stations from which the signals originated must be known. Different sets of stations are known as 'chains'. Specific chains can be determined from recorded LORAN numbers. Most vessels on the West Coast will be using 9940.

Instructions

1. Determine which chain needs to be used to convert the LORAN positions to Lat/Long. Typically this will be 9940, but may be 5990 for vessels in Northern Oregon and Washington. If you are fishing north of the California border and one of the TD numbers (one of the two numbers that you should have recorded) is between 14400 and 15000, you are using chain 5990.

2. To do the conversion, you need to download a program from the USCG web site: http://www.navcen.uscg.gov/?pageName=loranConvert. Download the POSAID program. You can save the program to any folder on your desktop. The download includes POSAID, POSAID2, a test file (README), and a set-up program (CHAIN). Do not delete any of them or the program may not run.

3. Open POSAID2. A notice to all users will appear. Press any key to start the program. The **Main Menu** will appear.

4. Select option C (Change Defaults) by pressing the C key on your keyboard. The **Change Defaults Menu** will appear. Verify that the latitude / longitude display mode (item 2) is degrees minutes (dd mm.mmmm), not degrees minutes seconds (dd mm ss.sss). If it is not, select item 2 by pressing the 2 key on your keyboard. On the menu that appears select dd mm.mmmm as a display mode by pressing the 3 key on your keyboard. This will return you to the **Change Defaults Menu** where dd mm.mmmm should now appear to the right of item 2.

5. Select option 6 (LORAN C chain used) on the **Change Defaults Menu** by pressing the 6 key on your keyboard. You will be asked to "Input GRI of new Loran C chain". The default chain is 9960 - Northeast US chain. This should be changed to 9940 - West Coast US chain, unless you have a TC between 14400 and 15000 and were fishing north of California. Then you would change it to 5990 - Canadian West Coast. This will bring you back to the **Change Defaults Menu** with the appropriate chain now listed to the right of item 6.

6. Select item 1 (Work area position) by pressing the 1 key on your keyboard. This will move the cursor to the field to the right of Latitude on the **Change Defaults Menu**. Here you must enter a 'seed position', a position near where the vessel was fishing (+ one degree). You may have to refer to a chart or call your coordinator to get this. These numbers **MUST** be entered in the following format with all spaces and punctuation present:

   Latitude ## ##.####'

   Longitude ### ##.####' W

7. Press the enter key after entering each number. Make sure you enter the W (west) for the longitude (program is not case sensitive) as the default for this program is east (e.g. 124 40.0000' W). You do not need to enter an N for the latitude as north is the default setting. If all locations to be converted are in the same general area this number will not need to be changed again. If you are converting positions from widely dispersed areas, the seed position may need to be changed.

8. Verify that other default settings are correct. Values for the items listed should be:

   3 - Coordinate system for Lat/ Lon = WGS84

   4 - Units for displaying distance = meters

   5 - Decimal places displayed = 4

   6 - Name of defaults file = Posaid.def.

9. Press the 8 key on your keyboard to save the current defaults. The text will turn blue. Press the R key on your keyboard to return to the **Main Menu**.

10. Select option 3 (Convert TD's to Lat/Long) by pressing the 3 key on your keyboard. The **TD to Lat/ Lon Input Verification Menu** will appear.

11. Select option 4 (list LORAN-C TD's of unknown position) by pressing the 4 key on your keyboard. A screen with the names of two of the four stations will appear (X-ray, Whiskey, Yankee and Zulu). Disregard the station "names" and simply enter one of the two TD numbers and hit return. Do the same for the second number. The **TD to Lat/Lon Input Verification Menu** will reappear with the LORAN positions to the right of item 4.

12. To continue press C on your keyboard. This will bring up the Changing **TD's to Lat/Lon Display screen** with the converted Lat/Long position displayed at the bottom of the screen. Record this position.

13. To continue converting LORAN positions press I (I) nput TD's on your keyboard. This brings up a screen where LORAN positions for the same chain may be entered. There are no station names displayed here and it does not matter in what order the position numbers are entered, the correct stations will be automatically pulled up (hit the enter key after each number). After the second number is entered, the program will ask if this is the correct position. Verify that the numbers and stations are correct and then press Y. This will bring up the Changing **TD's to Lat/Lon Display screen** with the converted Lat/ Long position displayed at the bottom of the screen. Record this position. Repeat these steps for each set of LORAN numbers.

14. Example. Enter 9940 for the chain. Use a seed position of 45 00.0000' N, 125 00.0000' W. Enter the TD coordinates of 13200.0906 and 27889.0745. You will be brought back to the TD to Lat/Long conversion menu once both TD numbers are entered. Enter C- Continue with current values and hit enter. This will give you the Lat/Long. It should be 44 00.0000' N, 124 00.0000' W. If you have any questions, contact your coordinator.

Latitudinal and Depth Distribution Of Groundfish Adult Species

Latitudinal and depth distributions of groundfish species (adults) managed under the Pacific Coast Groundfish Fishery Management Plan[a]

Common Name	Scientific Name	Overall Latitudinal Distribution	Highest Density Latitudinal Distribution	Overall Depth Distribution (fm)	Highest Density Depth Distribution (fm)
Arrowtooth flounder	Atheresthes stomias	N. 34° N lat.	N. 40° N lat.	10 - 400	27 - 270
Butter sole	Isopsetta isolepis	N. 34° N lat.	N. 34° N. lat	0 - 200	0 - 100
Curlfin sole	Pleuronichthys decurrens	Coastwide	Coastwide	4 - 291	4 - 50
Dover sole	Microstomus pacificus	Coastwide	Coastwide	10 - 500	110 - 270
English sole	Parophrys vetulus	Coastwide	Coastwide	0 - 300	40 - 200
Flathead sole	Hippoglossoides elassodon	N. 38° N lat	N. 40° N lat	3 - 300	100 - 200
Pacific Sanddab	Citharichthys sordidus	Coastwide	Coastwide	0 - 300	0 - 82
Petrale sole	Eopsetta jordani	Coastwide	Coastwide	10 - 250	160 - 250
Rex sole	Glyptocephalus zachirus	Coastwide	Coastwide	10 - 350	27 - 250
Rock sole	Lepidopsetta bilineata	Coastwide	N. 32°30´ N. lat	0 - 200	summer 10 - 44 winter 70 - 150
Sand sole	Psettichthys melanostictus	Coastwide	N. 33°50´ N. lat	0 - 100	0 - 44
Starry flounder	Platichthys stellatus	Coastwide	N. 34°20´ N. lat	0 - 150	0 - 82
Aurora rockfish	Sebastes aurora	Coastwide	Coastwide	100 - 420	82 - 270
Bank rockfish	Sebastes rufus	S. 39°30´ N lat	S. 39°30´ N lat	17 - 135	115 - 140
Black rockfish	Sebastes melanops	N. 34° N lat	N. 34° N lat	0 - 200	0 - 30
Black-and-yellow rockfish	Sebastes chrysomelas	S. 40° N lat	S. 40° N lat	0 - 20	0 - 10
Blackgill rockfish	Sebastes melanostomus	Coastwide	S. 40° N lat	48 - 420	125 - 300
Blue rockfish	Sebastes mystinus	Coastwide	Coastwide	0 - 300	13 - 21
Bocaccio rockfish	Sebastes paucispinis	Coastwide	S. 40° N lat, N. 48° N lat	15 - 180	54 - 82

Latitudinal and depth distributions of groundfish species (adults) managed under the Pacific Coast Groundfish Fishery Management Plan[a]

Common Name	Scientific Name	Overall Latitudinal Distribution	Highest Density Latitudinal Distribution	Overall Depth Distribution (fm)	Highest Density Depth Distribution (fm)
Bronzespotted rockfish	Sebastes gilli	S. 37° N lat	S. 37° N lat	41 - 205	110 - 160
Brown rockfish	Sebastes auriculatus	Coastwide	S. 40° N lat	0 - 70	0 - 50
Calico rockfish	Sebastes dallii	S. 38° N lat	S. 33° N lat	10 - 140	33 - 50
California scorpionfish	Scorpaena gutatta	S. 37° N lat	S. 34°27′ N lat	0 - 100	0 - 100
Canary rockfish	Sebastes pinniger	Coastwide	Coastwide	27 - 460	50 - 100
Chameleon rockfish	Sebastes phillipsi	37°- 33° N lat	37°- 33° N lat	95 - 150	95 - 150
Chilipepper rockfish	Sebastes goodei	Coastwide	34°- 40° N lat	27 - 190	27 - 190
China rockfish	Sebastes nebulosus	N. 34° N lat	N. 35° N lat	0 - 70	2 - 50
Copper rockfish	Sebastes caurinus	Coastwide	S. 40° N lat	0 - 100	0 - 100
Cowcod	Sebastes levis	S. 40° N lat	S. 34°27′ N lat	22 - 270	100 - 130
Darkblotched rockfish	Sebastes crameri	N. 33° N lat	N. 38° N lat	16 - 300	96 - 220
Dusky rockfish	Sebastes ciliatus	N. 55° N lat	N. 55° N lat	0 - 150	0 - 150
Dwarf-red rockfish	Sebastes rufinanus	33° N lat	33° N lat	>100	>100
Flag rockfish	Sebastes rubrivinctus	S. 38° N lat	S. 37° N lat	17 - 100	shallow
Freckled rockfish	Sebastes lengtingnosus	S. 33° N lat	S. 33° N lat	22 - 92	22 - 92
Gopher rockfish	Sebastes carnatus	S. 40° N lat	S. 40° N lat	0 - 30	0 - 16
Grass rockfish	Sebastes rastrelliger	S. 44°40′ N lat	S. 40° N lat	0 - 25	0 - 8
Greenblotched rockfish	Sebastes rosenblatti	S. 38° N lat	S. 38° N lat	33 - 217	115 - 130
Greenspotted rockfish	Sebastes chlorostictus	S. 47° N lat	S. 40° N lat	27 - 110	50 - 100
Greenstriped rockfish	Sebastes elongatus	Coastwide	Coastwide	33 - 220	27 - 136
Halfbanded rockfish	Sebastes semicinctus	S. 36°40′ N lat	S. 36°40′ N lat	32 - 220	32 - 220
Harlequin rockfish	Sebastes variegatus	N. 40° N lat	N. 51° N lat	38 - 167	38 - 167
Honeycomb rockfish	Sebastes umbrosus	S. 36°40′ N lat	S. 34°27′ N lat	16 - 65	16 - 38
Kelp rockfish	Sebastes atrovirens	S. 39° N lat	S. 37° N lat	0 - 25	3 - 4

Latitudinal and depth distributions of groundfish species (adults) managed under the Pacific Coast Groundfish Fishery Management Plan[a]

Common Name	Scientific Name	Overall Latitudinal Distribution	Highest Density Latitudinal Distribution	Overall Depth Distribution (fm)	Highest Density Depth Distribution (fm)
Longspine thornyhead	Sebastolobus altivelis	Coastwide	Coastwide	167 - >833	320 - 550
Mexican rockfish	Sebastes macdonaldi	S. 36°20′ N lat	S. 36°20′ N lat	50 - 140	50 - 140
Olive rockfish	Sebastes serranoides	S. 41°20′ N lat	S. 40° N lat	0 - 80	0 - 16
Pacific ocean perch	Sebastes alutus	Coastwide	N. 42°′ N lat	30 - 350	110 - 220
Pink rockfish	Sebastes eos	S. 37° N lat	S. 35° N lat	40 - 200	40 - 200
Pinkrose rockfish	Sebastes simulator	S. 34° N lat	S. 34° N lat	54 - 160	108
Puget Sound rockfish	Sebastes emphaeus	N. 40° N lat	N. 40° N lat	6 - 200	6 - 200
Pygmy rockfish	Sebastes wilsoni	N. 32°30′ N lat	N. 32°30′ N lat	17 - 150	17 - 150
Quillback rockfish	Sebastes maliger	N. 36°20′ N lat	N. 40° N lat	0 - 150	22 - 33
Redbanded rockfish	Sebastes babcocki	Coastwide	N. 37° N lat	50 - 260	82 - 245
Redstripe rockfish	Sebastes proriger	N. 37° N lat	N. 37° N lat	7 - 190	55 - 190
Rosethorn rockfish	Sebastes helvomaculatus	Coastwide	N. 38° N lat	65 - 300	55 - 190
Rosy rockfish	Sebastes rosaceus	S. 42° N lat	S. 40° N lat	8 - 70	30 - 58
Rougheye rockfish	Sebastes aleutianus	Coastwide	N. 40° N lat	27 - 400	27 - 250
Semaphore rockfish	Sebastes melanosema	S. 34°27′ N lat	S. 34°27′ N lat	75 - 100	75 - 100
Sharpchin rockfish	Sebastes zacentrus	Coastwide	Coastwide	50 - 175	50 - 175
Shortbelly rockfish	Sebastes jordani	Coastwide	S. 36° N lat	50 - 175	50 - 155
Shortraker rockfish	Sebastes borealis	N. 39°30′ N lat	N. 44° N lat	110 - 220	110 - 200
Shortspine thornyhead	Sebastolobus alascanus	Coastwide	Coastwide	14 - >833	55 - 550
Silvergray rockfish	Sebastes brevispinis	Coastwide	N. 40° N lat	17 - 200	55 - 160
Speckled rockfish	Sebastes ovalis	S. 38° N lat	S. 37° N lat	17 - 200	41 - 83
Splitnose rockfish	Sebastes diploproa	Coastwide	Coastwide	50 - 317	55 - 250
Squarespot rockfish	Sebastes hopkinsi	S. 38° N lat	S. 36° N lat	10 - 100	10 - 100
Starry rockfish	Sebastes constellatus	S. 38° N lat	S. 37° N lat	13 - 150	13 - 150
Stripetail rockfish	Sebastes saxicola	Coastwide	Coastwide	5 - 230	5 - 190

Latitudinal and depth distributions of groundfish species (adults) managed under the Pacific Coast Groundfish Fishery Management Plan[a]

Common Name	Scientific Name	Overall Latitudinal Distribution	Highest Density Latitudinal Distribution	Overall Depth Distribution (fm)	Highest Density Depth Distribution (fm)
Swordspine rockfish	Sebastes ensifer	S. 38° N lat	S. 38° N lat	38 - 237	38 - 237
Tiger rockfish	Sebastes nigrocinctus	N. 35° N lat	N. 35° N lat	30 - 170	35 - 170
Treefish	Sebastes serriceps	S. 38° N lat	S. 34°27′ N lat	0 - 25	3 - 16
Vermillion rockfish	Sebastes miniatus	Coastwide	Coastwide	0 - 150	4 - 130
Widow rockfish	Sebastes entomelas	Coastwide	N. 37° N lat	13 - 200	55 - 160
Yelloweye rockfish	Sebastes ruberrimus	Coastwide	N. 36° N lat	25 - 300	27 - 220
Yellowmouth rockfish	Sebastes reedi	N. 40° N lat	N. 40° N lat	77 - 200	150 - 200
Yellowtail rockfish	Sebastes flavidus	Coastwide	N. 37° N lat	27 - 300	27 - 160
Cabezon	Scorpaenichthys marmoratus	Coastwide	Coastwide	0 - 42	0 - 27
Kelp greenling	Hexagrammos decagrammus	Coastwide	N. 40° N lat	0 - 25	0 - 10
Lingcod	Ophiodon elongatus	Coastwide	Coastwide	0 - 233	0 - 40
Pacific cod	Gadus macrocephalus	N. 34° N lat	N. 40° N lat	7 - 300	27 - 160
Pacific whiting	Merluccius productus	Coastwide	Coastwide	20 - 500	27 - 270
Sablefish	Anoplopoma fimbria	Coastwide	Coastwide	27 - >1,000	110 - 550
Big Skate	Raja binoculata	Coastwide	S. 46° N lat	2 - 110	27 - 110
California skate	Raja inornata	Coastwide	S. 39° N lat	0 - 367	0 - 10
Leopard shark	Triakis semifasciata	S. 46° N lat	S. 46° N lat	0 - 50	0 - 2
Longnose skate	Raja rhina	Coastwide	N. 46° N lat	30 - 410	30 - 340
Soupfin shark	Galeorhinus zyopterus	Coastwide	Coastwide	0 - 225	0 - 225

Latitudinal and depth distributions of groundfish species (adults) managed under the Pacific Coast Groundfish Fishery Management Plan[a]

Common Name	Scientific Name	Overall Latitudinal Distribution	Highest Density Latitudinal Distribution	Overall Depth Distribution (fm)	Highest Density Depth Distribution (fm)
Spiny dogfish shark	Squalus acanthias	Coastwide	Coastwide	0 - >640	0 - 190
Finescale codling	Antimora microlepis	Coastwide	N. 38° N lat	190 - 1,588	190 - 470
Pacific rattail	Coryphaenoides acrolepis	Coastwide	N. 38° N lat	85 - 1,350	500 - 1,350
Ratfish	Hydrolagus colliei	Coastwide	Coastwide	0 - 499	55 - 82

[a]Data from (Casillas, et al. 1998), (Eschmeyer, et. al 1983), (Hart 1988), (Miller and Lea 1972), (Love, et. al 2002), and NMFS Survey data. Depth distributions refer to offshore distributions, not vertical distributions in the water column.

Paperwork Reduction Act

The PRA requires federal agencies to obtain clearance in order to ask questions of members of the public. All questions asked by west coast groundfish observers have been approved under OMB Control No. 0648-0593 through 11/30/2015. Under the Magnuson-Stevens Fishery Conservation and Management Act (MSA) and implementing regulations, vessels are required to answer any question related to observer and vessel safety. However, vessels are not required to answer any other question asked by the observer. Vessel's willingness to answer all questions asked by observers is voluntary and this willingness is appreciated as it will ensure observer data collected on the vessel can be used in future analyzes.

The observer program can be contacted toll free at (866) 780-8064 or by the program's email address at NWFSC. observerprogram@noaa.gov if anyone has any questions.

A "Paperwork Reduction Act Information" sheet is mailed to all selected vessels for observer coverage and is included with their selection letter.

Paperwork Reduction Act Information

Information collected through the observer program is used to: (1) monitor catch and bycatch; (2) understand the population status and trends of fish stocks and protected species, as well as the interactions between them; (3) determine the quantity and distribution of net benefits derived from living marine resources; (4) predict the biological, ecological, and economic impacts of existing management actions and proposed management options; and (5) ensure that the observer programs can safely and efficiently collect the information required for the previous four uses. In particular, these biological and economic data collection programs contribute to legally mandated analyses required under the Magnuson-Stevens Fishery Conservation and Management Act (MSA), the Endangered Species Act (ESA), the Marine Mammal Protection Act (MMPA), the National Environmental Policy Act (NEPA), the Regulatory Flexibility Act (RFA), Executive Order 12866 (EO 12866), and other applicable law.

Most of the information collected by observers is obtained through "direct observation by an employee or agent of the sponsoring agency or through non-standardized oral communication in connection with such direct observations". Under the Paperwork Reduction Act (PRA) regulations at 5 C.F.R. 1320.3(h)(3), facts or opinions obtained through such observations and communications are not considered to be "information" subject to the PRA. The public reporting burden for responding to the questions that observers ask and that are subject to the PRA is estimated to average 34 minutes per trip, including the time for hearing and understanding the questions, searching existing data sources, gathering and maintaining the data needed, and completing and reviewing the collection of information. Send comments regarding this burden estimate or any other aspect of this collection of information, including suggestions for reducing this burden, to: West Coast Groundfish Observer Program, 2725 Montlake Blvd. East, Seattle, WA 98112.

Providing information related to observer and vessel

safety is mandatory under regulations at 50 C.F.R. 600.746. However, all other requested information is voluntary. Although you are under no legal obligation to answer non-safety related observer questions, we would appreciate your support as it ensures observer data can be used for its intended purpose.

The information collected will be kept confidential as required under Section 402(b) of the MSA (18 U.S.C. 1881a(b)) and regulations at 50 C.F.R. Part 600, Subpart E. Notwithstanding any other provision of the law, no person is required to respond to, nor shall any person be subject to a penalty for failure to comply with a collection of information subject to the requirements of the Paperwork Reduction Act, unless that collection of information displays a currently valid OMB Control Number.

Bedbug Protocol

Prior to Trip

If you think bed bugs are present on a vessel notify your coordinator and contractor.

Try to verify visually. Look under mattresses, pads, bunks, etc for bed bugs.

Ask crew about any measures they have taken to exterminate the bed bugs. Document what was done and when in your logbook.

Before Departing on Trip

If the boat you have been assigned has bed bugs, make sure that you have flying insect repellent, caladryl lotion, plenty of garbage bags, and a mattress cover that can be zipped around the mattress. It is a good idea to take a thermarest mattress as well in case the cover doesn't work and you don't want to sleep on that mattress. Even if the vessel fumigated it doesn't mean the bedbugs are completely gone. Continue to watch for them and keep your mattress covered. Make sure to keep a clean set of clothes in a zip lock bag so you have bed bug free clothes to wear home.

Bed Bugs Spotted During Trip

Bed bugs are active at night so this is when they will be more likely to be spotted. They do not like extreme heat or extreme cold so there are some steps that you can take while you are out there to try to get rid of them. One observer noticed that when the air conditioner was cranked up they did not come out. Another possibility is to bag your mattress in garbage bags and put it in the freezer for at least 12 hours or put it in a dry area on deck

where it can cook in the sun. Another option is to spray the mattress with the bug spray; make sure that you give it plenty of time to air out before sleeping on it and follow all warnings and precautions listed on the can of spray. In order to keep the bugs form getting in your clothes you should keep your clothes in garbage bags. Make sure that you call your coordinator and contractor to report that you witnessed bed bugs on the vessel.

After Trip

- **FREEZE GEAR** for at least 24 hours. Put gear in garbage bags.

IMPORTANT: Do not freeze electronic gear, except for EPIRB. Your EPIRB can go into the freezer with your survival suit.

- **BAG GEA**R: Everything that comes off the vessel should be in sealed garbage bags. When you take infected gear back to you house make sure you treat it right away to avoid getting bed bugs in your house. Wash all clothes right away in hot water and dry them with high heat in the dryer. Personal bags and stuff that cannot be washed in a machine can be treated by freezing or leaving it in a plastic bag and letting it bake in the hot sun. If for some reason you cannot take care of gear immediately then place it somewhere far away from furniture and carpeting. A garage would be an ideal place but if not possible a tiled bathroom or in the tub would also work.

Useful Websites

WCGOP Observer-Related Sites

West Coast Groundfish Observer Program

http://www.nwfsc.noaa.gov/research/divisions/fram/observer/index.cfm

West Coast Groundfish Regulations

http://listserver.afsc.noaa.gov/read/all_forums/subscribe?name=wcgroundfish

This site will subscribe you to recieve email updates on West Coast groundfish regulations as they occur.

NMFS (National Marine Fisheries Service)

http://www.nmfs.noaa.gov/fishnews.htm

This site subscribes you to updates on anything to do with fish nationally.

WCGOP Database Log-on

http://nwcoa3.nwfsc.noaa.gov/obsprod/logon.display

Pacific States Marine Fisheries Commission (PSMFC)

http://www.psmfc.org/index.html

Alaskan Observers, Inc. (AOI)

http://www.alaskanobservers.com/

Fisheries Management on the West Coast

Pacific Fishery Management Council (PFMC)

http://www.pcouncil.org/

NOAA Fisheries Northwest Regional Office (groundfish management)

http://www.nwr.noaa.gov/Groundfish-Halibut/Groundfish-Fishery-Management/index.cfm

International Pacific Halibut Commission

http://www.iphc.washington.edu/halcom/default.htm

State Agencies

California Department of Fish and Game (DFG)

http://www.dfg.ca.gov/

Oregon Department of Fish and Wildlife (ODFW)

http://www.dfw.state.or.us/

Washington Department of Fish and Wildlife (WDFW)

http://wdfw.wa.gov/

Fisheries Research on the West Coast

NOAA Northwest Fisheries Science Center

http://www.nwfsc.noaa.gov/research/divisions/fram/index.cfm

Pacific Marine Conservation Council

http://www.pmcc.org/news.html

Fish Identification

Fish Base: Database of over 28,000 species with images.

http://www.fishbase.org/search.cfm

Fisheries Regulations

NOAA Groundfish Management Regs and Public Notices

http://www.nwr.noaa.gov/Groundfish-Halibut/Groundfish-Fishery-Management/index.cfm

Marine Regulations

Washington: http://wdfw.wa.gov/fishing/commercial.html,

Oregon: http://www.dfw.state.or.us/MRP/regulations/commercial_fishing/index.asp

California: http://www.dfg.ca.gov/marine/fishing.asp#Commercial

Marine Safety

The Alaska Marine Safety Education Council

http://www.amsea.org/

EPIRB On-line registration and forms

http://www.sarsat.noaa.gov/beacon.html

Vessel Information

U.S. Coast Guard Vessel Search

http://www.st.nmfs.noaa.gov/st1/CoastGuard/VesselByName.html

NW Region List of LE permits

http://www.nwr.noaa.gov/Groundfish-Halibut/Groundfish-Permits/index.cfm

Marine Weather

NOAA: National Weather Service

http://www.nws.noaa.gov/

Independent Service (iwindsurf.com)

http://www.iwindsurf.com/windandwhere.iws

Observer Associations, Interest Groups

Association for Professional Observers

http://www.apo-observers.org

International Fisheries Observer & Montitoring Conference

http://www.ifomc.com/

Observer Programs Worldwide

Domestic

North Pacific Groundfish Observer Program

http://www.afsc.noaa.gov/FMA/default.htm

Alaska Marine Mammal Observer Program

http://www.fakr.noaa.gov/protectedresources/observers/mmop.htm

Northeast Fisheries Observer Program

www.nefsc.noaa.gov/sos/fishobs/fishobs.html

Florida Museum of Natural History:
Shark Fishery Observer Program:

http://www.flmnh.ufl.edu/fish/sharks/csop/csopjob.htm

Southeast Pelagic Observer Program

http://www.sefsc.noaa.gov/pop.jsp

Hawaii Longline Observer Program

http://www.fpir.noaa.gov/OBS/obs_index.html

National Observer Program

http://www.st.nmfs.gov/st4/nop/index.html

Foreign

Canadian At-Sea Fisheries Observer Program

http://www.archipelago.ca/services.aspx#TOP

Canadian Observer Provider

http://www.archipelago.ca/fm-overview.aspx

Marine Resources Assessment Group (MRAG) (multiple programs)

https://www.mragamericas.com/

Antarctica CCAMLR

http://www.ccamlr.org/en/fisheries/fishery-monitoring

Vessel Monitoring System (VMS)

Why does the Pacific coast groundfish fishery need a vessel monitoring program?

A vessel monitoring program is an enforcement tool that can be used to monitor compliance with areas closed to fishing. Since the vessel monitoring pilot program was implemented on January 1, 2004, new closed areas have gone into effect and the Council has prioritized expanding the original requirements to the Open Access commercial groundfish fleet in order to monitor compliance with groundfish conservation areas. The groundfish conservation areas include Rockfish Conservation Areas (RCAs), Cowcod Conservation Areas (CCAs), Cordell Banks Closed Area, Farallon Islands Closed Areas, Essential Fish Habitat Conservation Areas (EFHCAs), and Yelloweye Rockfish Conservation Areas (YRCAs). A complete description of these closed areas, including detailed location information and to which sectors and gears they apply, is available on the NMFS Northwest Region website by clicking on "Groundfish & Halibut", "Groundfish Fishery Management", then "Groundfish Closed Areas". Over time, the groundfish conservation areas will likely change. The National Marine Fisheries Service (NMFS) will keep the fishing fleet informed as these changes are made.

Parts of the Vessel Monitoring Program

The Pacific Coast vessel monitoring program consists of a vessel monitoring system and declaration reports. The vessel monitoring system (VMS) consists of equipment that tracks a vessel's geographic position through a satellite communication system. A VMS transceiver unit is installed aboard the vessel that communicates via a satellite to a processing center. For the Pacific Coast program, a basic VMS system with 1-way communication will be used to track vessel activity in relation to closed areas within 200 nautical miles along the Pacific coast. The declaration reports are reports given by fishermen before a fishing trip to identify which gear type will be used for fishing, which fishery they are participating in, and if the vessel operator intends to fish within an RCA. Declaration reports are necessary for all fisheries required to have VMS and reports must be provided to NMFS Office of Law Enforcement (OLE) before a vessel leaves port.

Commonly Asked Questions

Q: Who is required to have VMS?

A: Any vessel registered to a limited entry groundfish permit must have VMS to fish in state or federal waters (0-200 nautical miles offshore). Non-groundfish trawl vessels, vessels that use trawl gear but are not registered to limited entry groundfish permits, must have VMS to fish in state or federal waters (0-200 nautical miles offshore). Any vessel using non-trawl gear, that is not registered to a

limited entry groundfish permit, must have VMS on trips in which groundfish are taken and retained, possessed or landed in federal waters (3-200 nautical miles offshore).

Q: *Does a non-trawl vessel that is not registered to a limited entry groundfish permit need to have VMS if the vessel is used to fish in state waters and only transits through Federal waters with groundfish onboard?*

A: Yes, VMS is required.

Q: *Does a non-trawl vessel that is not registered to a limited entry groundfish permit need to have VMS to fish in both state and federal waters on the same trip when only groundfish from state waters are retained?*

A: Yes, VMS is required.

Q: *What are the vessel owner's responsibilities?*

A: The vessel owner must install and use (according to NMFS OLE installation and operation instructions) a type-approved VMS transceiver unit 24 hours per day; establish a service agreement with a type-approved communication service provider; send an activation report at least 72 hours prior to leaving port on the first trip that requires VMS and maintain a valid declaration report with NMFS OLE.

Q: *Who pays for the costs associated with VMS?*

A: The vessel owner or operator is responsible for purchasing the VMS equipment and paying all charges from the communication service provider to ensure continuous operation of the VMS transceiver units. Vessel owners may be reimbursed for the cost of some VMS units.

For more information or go to: **www.nmfs.noaa.gov/ole/nw_vms.html** or call: **Northwest Division Office for Law Enforcement (206) 526.6133**

*From the Compliance Guide for the Pacific Coast Groundfish Fishery Vessel Monitoring Program, National Oceanic and Atmospheric Administratio, National Marine Fisheries Service.

IFQ Species by Location Table

IFQ = Individual Fishing Quota
IBQ = Individual By-catch Quota

Species Name	North of 42°N latitude	42°N to 40°10'N latitude	40°10'N to 36° latitude	36°N to 34°27'N latitude	South of 34°27'N latitude
Arrowtooth flounder	Arrowtooth flounder				
Aurora rockfish	Minor Slope North of 40°10'N		Minor Slope South of 40°10'N		
Bank rockfish	Minor Slope North of 40°10'N		Minor Slope South of 40°10'N		
Blackgill rockfish	Minor Slope North of 40°10'N		Minor Slope South of 40°10'N		
Bocaccio rockfish	Minor Shelf North of 40°10'N		Boccacio rockfish South of 40°10'N - OVERFISHED		
Bronzespotted rockfish	Minor Shelf North of 40°10'N		Minor Shelf South of 40°10'N		
Butter sole	Other Flatfish				
Canary rockfish	Canary rockfish - OVERFISHED				
Chameleon rockfish	Minor Shelf North of 40°10'N		Minor Shelf South of 40°10'N		
Chilipepper rockfish	Minor Shelf North of 40°10'N		Chilipepper rockfish South of 40°10'N		
Cowcod rockfish	Minor Shelf North of 40°10'N		Cowcod rockfish South of 40°10'N - OVERFISHED		
Curlfin sole	Other Flatfish				
Darkblotched rockfish	Darkblotched rockfish - OVERFISHED				
Dover sole	Dover sole				
Dusky rockfish	Minor Shelf North of 40°10'N		Minor Shelf South of 40°10'N		
Dwarf-red rockfish	Minor Shelf North of 40°10'N		Minor Shelf South of 40°10'N		
English sole	English sole				
Flag rockfish	Minor Shelf North of 40°10'N		Minor Shelf South of 40°10'N		
Flathead sole	Other Flatfish				
Freckled rockfish	Minor Shelf North of 40°10'N		Minor Shelf South of 40°10'N		
Greenblotched rockfish	Minor Shelf North of 40°10'N		Minor Shelf South of 40°10'N		
Greenspotted rockfish	Minor Shelf North of 40°10'N		Minor Shelf South of 40°10'N		
Greenstriped rockfish	Minor Shelf North of 40°10'N		Minor Shelf South of 40°10'N		
Halfbanded rockfish	Minor Shelf North of 40°10'N		Minor Shelf South of 40°10'N		
Harlequin rockfish	Minor Shelf North of 40°10'N		Minor Shelf South of 40°10'N		
Honeycomb rockfish	Minor Shelf North of 40°10'N		Minor Shelf South of 40°10'N		
Lingcod	Lingcod North of 40°10'N		Lingcod South of 40°10'N		
Longspine Thornyhead	Longspine thornyhead North of 34°27'N				No IFQ - Trip Limits
Mexican rockfish	Minor Shelf North of 40°10'N		Minor Shelf South of 40°10'N		

Pacific cod	Pacific cod		
Pacific halibut	Pacific halibut IBQ	No IBQ Needed	
Pacific Ocean Perch	POP North of 40°10’N - OVERFISHED	Minor Slope South of 40°10’N	
Pacific sanddab	Other Flatfish		
Pacific whiting	Pacific whiting		
Petrale sole	Petrale sole - OVERFISHED		
Pink rockfish	Minor Shelf North of 40°10’N	Minor Shelf South of 40°10’N	
Pinkrose rockfish	Minor Shelf North of 40°10’N	Minor Shelf South of 40°10’N	
Pygmy rockfish	Minor Shelf North of 40°10’N	Minor Shelf South of 40°10’N	
Redbanded rockfish	Minor Slope North of 40°10’N	Minor Slope South of 40°10’N	
Redstripe rockfish	Minor Shelf North of 40°10’N	Minor Shelf South of 40°10’N	
Rex sole	Other Flatfish		
Rock sole	Other Flatfish		
Rosethorn rockfish	Minor Shelf North of 40°10’N	Minor Shelf South of 40°10’N	
Rosy rockfish	Minor Shelf North of 40°10’N	Minor Shelf South of 40°10’N	
Rougheye rockfish	Minor Slope North of 40°10’N	Minor Slope South of 40°10’N	
Sablefish	Sablefish North of 36°N	Sablefish South of 36°N	
Sand sole	Other Flatfish		
Sharpchin rockfish	Minor Slope North of 40°10’N	Minor Slope South of 40°10’N	
Shortraker rockfish	Minor Slope North of 40°10’N	Minor Slope South of 40°10’N	
Shortspine thornyhead	Shortspine thornyhead North of 34°27’N	SSPN South of 34°27’N	
Silvergray rockfish	Minor Shelf North of 40°10’N	Minor Shelf South of 40°10’N	
Speckled rockfish	Minor Shelf North of 40°10’N	Minor Shelf South of 40°10’N	
Splitnose rockfish	Minor Slope North of 40°10’N	Splitnose rockfish South of 40°10’N	
Squarespot rockfish	Minor Shelf North of 40°10’N	Minor Shelf South of 40°10’N	
Starry flounder	Starry flounder		
Starry rockfish	Minor Shelf North of 40°10’N	Minor Shelf South of 40°10’N	
Stripetail rockfish	Minor Shelf North of 40°10’N	Minor Shelf South of 40°10’N	
Swordspine rockfish	Minor Shelf North of 40°10’N	Minor Shelf South of 40°10’N	
Tiger rockfish	Minor Shelf North of 40°10’N	Minor Shelf South of 40°10’N	
Vermilion rockfish	Minor Shelf North of 40°10’N	Minor Shelf South of 40°10’N	
Widow rockfish	Widow rockfish - OVERFISHED		
Yelloweye rockfish	Yelloweye rockfish - OVERFISHED		
Yellowmouth rockfish	Minor Slope North of 40°10’N	Minor Slope South of 40°10’N	
Yellowtail rockfish	Yellowtail rockfish North of 40°10’N	Minor Shelf South of 40°10’N	

Glossary

A - B

ABC: "Acceptable Biological Catch" - the annual harvest level for each species based only on biological considerations

Aft: Towards the stern or back end of a vessel

Amidships: Midway between the bow and stern of a ship, or on the centerline

Anchor/Buoy lines: Sections of line that join the groundline and anchors on the bottom of the ocean to the buoys or "bags" on the surface.

Athwart ships: Side-to-side across a ship, perpendicular to the centerline

Bag: The codend or another name for a buoy.

Bait bags/jars: Containers filled with ground bait that are hung inside pots to attract fish.

Beam: Width of a ship

Benthic: Living in direct relation with the bottom

Bias: Tending to yield one outcome more frequently than others. Factors affecting the randomness of a sample, including possible mechanical sorting of catch by an incline belt, or purposeful presorting by a crew member, will introduce bias.

Bight: Aloop or turn in a line

Bleeder/Sorter: Crewman assigned to sort bycatch out of the catch, and to cut the "throat"of the cod.

Block/Hydro/Hauler: Hydraulically driven wheel into which the groundline is placed during gear retrieval. As the wheel spins the groundline is drawn on board.

Boat Share: The percentage of the gross which goes to the vessel owner

Bobbin: A round, rubber or steel roller used in the footrope of a bottom net to protect the net from damage

Bosun: Person in charge of a ship's rigging, anchors, cables and deck crew

Bottom: (1) ocean floor, (2) fishing depth, or (3) a ship hull. Which meaning to apply must be taken from context.

Bow: The front section of a boat or ship

Bowline: A type of knot used to form an eye in the end of a rope.

Brailer: A type of netting that is attached to a crane and used to transport fish and other materials from one vessel to the dock or to another vessel

Breech: A behavioral characteristic of some marine mammals such as humpback whales, where they rise vertically out of the water, and then with most of their body above the surface, they fall to their back or side

Bridge: The control center of a ship

Bridle: Wire attached to the headrope, footrope or side panel of a net, by which the net is towed

Bulkhead: A wall separating compartments of a ship

Bulwarks: The upper section of the side plating of a ship, which extends above and around the upper deck

C

Capstan (gypsy): An upright, spool-shaped, power rotational cylinder around which cables or hawsers are wound

Catch Category: Categories comprised of one or more species for management purposes.

Catcher boat: Vessel that is used for catching fish and that does not process (freeze) fish on board

Chaffing gear: Protective carpeting (or strands of nylon forming a carpet pile) on the outer, underside of the trawl net to keep it from catching and ripping on obstacles on the bottom

Chief: The engineer; responsible for care of engines and deck machinery

Choker, choke strap: Aloop of wire or rope used to cinch off the net or codend

Chopper: Machine used to grind frozen herring or squid for bait or the person assigned this duty.

Cleat: A heavy piece of wood or metal having two horns around which ropes may be made fast or belayed, usually secured to a fixed object such as the dock or deck

Coded wire tag: Small tag (3mm) etched with binary code that are inserted into the snout of fishes for later identification

Codend: The end "bag" of a trawl net where the majority of the fish are collected and held

Coiler: Person or machine that is designated to coil line as it is retrieved by the block.

Combing: A low partition that separates the trawl deck from the side pockets

Companionway: Entrance/stairway from deck to fo'c'sle and engine room

Compliance: Being in accordance with the fishing regulations

Composition: In the groundfish Observer Program, this refers to the makeup of harvested species in a catch, and the sample you collect.

Cookie (disc): A flat, round piece of rubber with a hole in the center strung on a wire rope or chain to protect it from abrasion and to stir up a mud cloud. Used on non-pelagic trawl gear.

Crucifier A pair of rollers or steel pegs which stand vertically with only enough room for the groundline to pass between. During gear retrieval the groundline passes between the rollers and the hooks are pulled out of the fish.

D - E

Demersal: Dwelling at or near the bottom

Discard: Everything that is not retained.

Disembark: To get off a vessel

Diver/Trailer buoys: A small buoy attached to the main buoy with a length of line. The diver buoy "trails" behind the main buoy and allows a larger target for grappling.

Dogs: Metal hooks that are hydraulically controlled to secure a pot to a launcher.

Door: A large steel or alloy structure attached to each main wire (in front of the net) to spread the net horizontally by means of hydrodynamic and friction forces

Draft: Vertical distance from keel to waterline of a ship

Drop-off: Those organisms that fall or are knocked off of a hook prior to their being landed.

Drum: A metal spool or cylinder around which cable, etc. is wound

Drumhead: The top of a capstan, into which bars are inserted for leverage in turning it

Ebb tide: Outgoing tide

EEZ: "Exclusive Economic Zone" - the term for the 200 mile jurisdiction zone, in which a nation has exclusive fishing rights, formerly called the FCZ

Embarkation: To board a vessel

EPIRB: "Emergency Position Indicator Radio Beacon"

Expansion straps (container lines): A series of lines running around the circumference of a codend to provide strength and help maintain the shape of the bag

F

Fathom: A measure of length or depth equal to six feet

Fingers/Triggers: Small plastic strips located in the tunnel of a pot which allow fish to enter a pot but not exit.

Fishfinder: An electronic device for locating schools of fish under a vessel

Fishing line: A length of chain or wire in the bottom, front end of a net between the footrope and the bolsh line

Fishing mortality: Removal (deaths) of fish from a population due to fishing activity.

Flatfish: Fish which are laterally compressed and orient themselves in the water with their lateral surfaces or sides towards the surface and bottom.

Flatlink: A piece of cut or cast hardware, generally oblong in shape, with leg diameter smaller in certain areas to allow attachment of a G-hook; used where wires must be connected and disconnected frequently

Flood tide: Incoming tide

Fo'c'sle (from: forecastle): The forward part of a ship where

sailor's quarters are located

Footrope: On a non-pelagic net, a series of bobbins, tires or discs strung on chain or wire rope attached to the bottom front of a bottom net to protect the net from damage. On a midwater net, the rope or wire running along the front, bottom edge of the net.

Forward: Towards the bow of a vessel

Fresh weight: The weight of the whole fish (or animal) as it was when alive. Also called round weight, whole weight.

G

Galley: Ship's kitchen and/or mess hall

Gallows: Structure from which trawl blocks are hung; separate units port and starboard

Gangion: The length of line that connects the hook to the groundline. It is often only two to three feet long.

Gantry: A frame structure, usually at the aft of a vessel, which supports pulleys (blocks) used in setting and retrieving trawl nets

Gas bladder: A sac filled with air or similar gases in the body cavity of a fish. May or may not be attached to the throat by a duct.

G-hook: A piece of cut or cast iron hardware in the shape of a "G", used with a flatlink where wires must be connected and disconnected frequently

Gill rakers: Bony tooth like structures on the anterior edges of the gill arches. For protection or straining out food.

Gilson: A single hookline (as distinguished from a multiple block) used to assist in setting, hauling and moving gear on deck

Groundline/Mainline: The length of line to which all of the hooks are attached. This line is the "backbone" of the gear

Gunnel or Gunwale: The upper edge of the side of a boat

Gurdy: Special winch for hauling of longlines or trolling lines

Gypsyhead: A metal drum with a smooth concave surface, usually mounted on a winch. Several wraps of line around the gypsy provide enough friction while it is turning to raise heavy loads smoothly because the line slips and is easily controlled, like the friction on a clutch plate.

H - K

Halibut excluder: A divider located in the tunnel of a pot that restricts the size of the opening.

Hatch: An opening in a deck or bulkhead of a ship.

Haul: A catch of fish from one tow of a net or longline

Haulback: When the vessel lifts the net out of the fishing depth

Hawser: Any large rope (generally five inches or more in circumference) used primarily for towing, mooring or hauling

High grading: When a vessel puts up product but later discards it overboard in favor of a more valuable product

Hook: Usually a three pronged grappling hook used to snag the trailer buoy line.

Hook Counts: The average number of hooks per segment of gear.

Horn Off: To knock organisms off of a hook using the butt of a gaff.

I-beam: A steel beam shaped like an "I" in cross section

Intermediate: A gradually tapered section, generally of small mesh, between the back body of a trawl and the codend.

Joint Venture: A cooperative fishing/processing effort between vessels of different nationalities

Knot: A measure of time multiplied by distance, equaling speed. One knot equals one nautical mile (6080 feet) in one hour.

L - O

Launcher: Hydraulic lift, usually located on the port side of a vessel, used to "launch" pots over the side of the vessel and to adjust the angle of the pot when it is being emptied.

Lay: The direction in which the strands of a rope are twisted (right or left) or the degree of tightness with which they are twisted (soft, medium, hard, etc.)

Lazaret: A storage place between the decks of a ship

Lee, Leeward: The side protected from the wind, opposite the "windward" side

Live Tanks: Tanks or bins on factory trawler vessels where the catch is dumped prior to sorting or processing

Lobby: Another name for a fish bin on a catcher/processor

Main Wires: The two large cables used to connect the trawl net to the vessel while fishing

Master: Fishing master and/or captain

Mustang suit: Insulated and waterproof coveralls worn in the cold months while sampling on deck.

Net reel: A hydraulic drum on the deck on which the net and most of the rigging are wound

Otter trawl: The type of net gear used on stern trawlers

Otterboard: Another name for a trawl door

Optimum Yield (OY): A range within which summed Total Allowable Catches must fall

P

Panel: Mesh netting attached to a square metal frame. Two large panels and four smaller panels are attached to a heavy steel frame box to form the six sides of a pot.

Pelagic: Midwater

Peritoneum: The lining of the gut cavity

Pew, Pew stick: A sharp-ended pole, which is used to skewer fish and toss them to another location

Pick/"Running the hook": Hook connected to the end of the boom which is attached to the bridle and is used to lift a pot onto the launcher as the pot is being retrieved.

Plotter: Electronic mapping device that displays the local area and the vessel's position on it. The plotter allows skippers to record the area of a string and also the number of pots in a string on a digital map display.

Pod: A school of marine mammals; such as seals, whales or dolphins

Population: The total of individuals occupying an area or making up a whole. When sampling aboard a trawler, a population is defined as the catch from a single haul.

Porthole: A window in the hull or the outside bulkhead of a ship

Pot Tie: A short piece of line used to tie pots together when they are stacked on deck.

Predominant species: Species that are the most abundant in the catch - not necessarily the target species

Presorting: The segregation and/or removal of any item(s) or organism(s) from the catch prior to the point where an Observer is collecting a sample.

Prohibited species or prohibited species groups: Species whose allowable retention is zero. Salmon, Pacific Halibut, and Dungeness crab are prohibited species.

Prohibited species sampling: The weight of groundfish catch sorted by the Observer to determine only the numbers and weights of salmon, herring, halibut, king crab, and tanner crab present

Prohibited Species Catch (PSC): A harvest limit usually placed on halibut, salmon, crabs or other species which must be discarded in the groundfish fisheries

R

R.D.F.: Radio direction finder

Radio Call Sign: Four letters and/or numbers, which are an international identifier of a vessel. TheInternational Radio Call Sign (IRCS) is painted in large letters on the side of each vessel and on the deck of the flying bridge.

Random: Relating to a set, each of whose elements have an equal probability of occurring in a sample. These elements are chosen as sample units in a manner, which eliminates subjectivity.

Random sample frame: The population divided into independent countable units.

Regenerated scale: A fish scale that has grown in to replace one that was lost. Regenerated scales are useless for aging a salmon, but can be used to identify it to species.

Reserve: A portion of quota set aside at the beginning of the fishing year to allow for uncertainties in preseason estimates of DAP catch

Riblines: Heavy lines or chains that run down the length of the trawl net to strengthen it

Roller: A device made up of one or more metal pins that spin allowing the groundline to be pulled up and over the rail of a vessel during retrieval such that tension and friction on the line is reduced.

Roller station/pit: Term used to describe the area where fishermen stand while retrieving the line and gaffing fish coming in over the roller.

Rollerman: A crewman who stands in the roller station and monitors the retrieval of the gear. The rollerman lands any commercially valuable fish and excludes any non-commercially valuable fish from being landed.

Rostrum: A pointed, calcareous, median extension on the anterior end of crab carapaces

Round weight: The weight of the whole fish (or animal) as it was when alive, synonymous with fresh weight and whole weight

Roundfish: Fish that orient themselves in the water with the dorsal side towards the surface and ventral side towards the bottom

"Run pots": A phrase used interchangeably with "retrieve pots". It is the phrase used in the vessel logbook to indicate the number of pots that have been retrieved from a string.

S

Sample size: The portion of the population that is sampled.

Sample type: The method used to select part of a population.

Sample weight: The actual weight in kilograms of a composition sample.

Sampling: The process of selecting part of a population for the purpose of determining the parameters, or characteristics, of the whole population. Composition sampling refers to taking samples of a haul in order to determine the fishing mortality of species occurring in the sample.

Scupper: A hole in the bulwarks which allows water to drain from the deck

Segment of Gear: In this manual a segment of gear refers to the standard unit the vessel uses for measuring gear. This could refer to a mag, skate, tub, or coil of gear.

Set: The entire length of groundline from the first hook to the last hook, also referred to as a "string" of gear.

Sheave: A wheel with a grooved rim, such as is mounted in a pulley block to guide the rope or cable

Shot: A pre-measured length of buoy line, usually 10 to 20 fathoms long. Normally there are two set lengths, a "Long" shot and a "Short" shot. When setting a string, the skipper will tell the crew how many shots to tie to a pot for various bottom depths.

Skate: A length of longline gear, usually 100 fathoms or 600 feet long

Skate bottom: A fabric square with lines on the corners to tie it into a bundle once a longline "skate" has been coiled onto it.

Skate or Mag markers: Markers in the groundline that separate the sections of gear. These may be flourescent tape woven onto the line, knots, line splices, carabineers, or magazine (mag) clips.

Skates/Tubs/Coils: Terms used to describe the smaller segments of gear within a set or a magazine.

Spatial: Referring to a unit of space used in random sampling. For example: a third of a bin, or a section of trawl alley, are spatial units.

Species composition sample: To sort a defined weight of catch such that each organism sampled for is grouped by family or by species and to determine the number and weight of the organisms in each group

Spring line: A mooring line attached amidships

SSB: "Single Side Band" radio used for long distance contact

Stack: This term is used on pot vessels to refer to pots stacked on the back deck.

Starboard: The right side of a ship (when one is looking forward)

Stern: The aft or back end of a vessel

Stern ramp (slip): A sloping ramp in the stern of a trawler between the deck and the water line, through which the net is set and hauled.

Stern trawler: Any of various sized fishing vessels which trawl a conical shaped mesh net through the water, haul it up a ramp through the stern of the ship, empty, and process the catch to make a wholesale fish product. These vessels may fish for a month or more at sea without support.

String: Pots deployed individually and are not attached to one another in any way. This term refers to pots set at a similar time in a similar area and depth. What a skipper calls a string varies considerably between vessels. Strings are analogous to sets.

Sub-sample: The weight of catch designated by the Observer which weighs less than the sample weight and is processed for a supplemental task to determining the composition of a haul, such as sampling for average weight.

T - Z

Table: Some vessels have a sorting table on the back deck that pivots on one axis. The contents of a pot are dumped onto the table, and the table is swung out of the way to re-launch the pot.

Total Allowable Catch(TAC): Annual harvest levels based on biological, economic and social factors

Taper: To cut webbing according to a given formula for fitting into a trawl

Tare: A deduction from gross weight to obtain net weight. Usually made to allow for the weight of a container.

Temporal: Referring to a unit of time used in random sampling. For example: one hour of processing time, or systematic intervals of ten minutes, are examples of temporal units.

Trawl: A cone shaped net, towed through the water to catch fish

Trawl Alley: The central passage on a trawl vessel where the codend is placed after haulback

Trawl Doors: Often referred to as "doors," these are two metal plates, each attached to a main wire, designed to keep the mouth of the net open while fishing

Trip: The time period from when the vessel leaves harbor until it returns to harbor to offload product or catch

Trip Limit: The amount of a catch category that a vessel is allowed to retain by trip.

Tuning/Overhauling gear: Term used to describe the work involved in straightening hooks, replacing gangions, or splicing the damaged groundlines.

Tunnel: Short mesh-lined openings on two or three sides of a pot. These are the entrances to the trap. Fish and crab are able to swim in but are unable to make their way back out due to the fingers/triggers.

Under way: Vessel in forward motion, running. According to Coast Guard regulation, a vessel is under way if it is not at anchor or at dock, so a vessel adrift is technically under way.

Warp (main wire): The cables on a trawler which run from the main winches to the trawl doors on the net

Weighed sample: A "basket" sample. The catch sampled by the Observer is weighed on a scale.

Winch: A hydraulic machine with one or more drums on which to coil rope, chain, or cable for hauling or hoisting

Wing: The sides off a trawl net near the opening, usually with larger mesh than the rest off the net

Wrister: A coated cloth tube worn on the arm, extending from the elbow and covering the wrists. Keeps arms warm and dry. Fish blood and slime are more easily washed out from these than from shirtsleeves.

Acknowledgements

Southwest Region, NMFS, Drift Gillnet Observer Program

North Pacific Groundfish Observer Program, National Marine Fisheries Service (NMFS)

At-Sea Observer Program, Dept. of Fisheries and Oceans, Canada

Andy Hickman, STAR

Brian Culver, Washington Department of Fish and Wildlife

C.M. Miri, Dept. of Fisheries and Oceans, Newfoundland

Commander Chris Woodle, US Coast Guard

D.W. Kulla, Dept. of Fisheries and Oceans, Newfoundland

Dan Harding, US Coast Guard

Dave Thomas, California Dept. of Fish and Game

Don Petersen, Southwest Region, NMFS

Dr. Richard Methot, Northwest Fisheries Science Center, NMFS

Erica Fruh, Northwest Fisheries Science Center, NMFS

Fran Recht, Pacific States Marine Fisheries

Gregg Williams, International Pacific Halibut Commission

J.R. Firt, Dept. of Fisheries and Oceans, Newfoundland

Jerry Dzugan, AMSEA

Joseph Arceneaux, Southwest Region, NMFS

Julia Parrish, University of Washington, Seabirds

Keith Mattheson, Oregon Department of Fish and Wildlife

LB Boyd, California Dept. of Fish and Game

Margaret Toner, National Observer Program

Mark Saelens, Oregon Department of Fish and Wildlife

Michele Robinson, Washington Department of Fish and Wildlife

Mike Fukushima, California Dept. of Fish and Game, State coordinator

Roy Torres, NMFS Enforcement

Sally Mizroch, National Marine Mammal Lab, NMFS

Sharon Davis, Alaska Fisheries Science Center, NMFS

Sheri O'Brien, STAR

Todd Hass, University of Washi